EAGLE LIFT

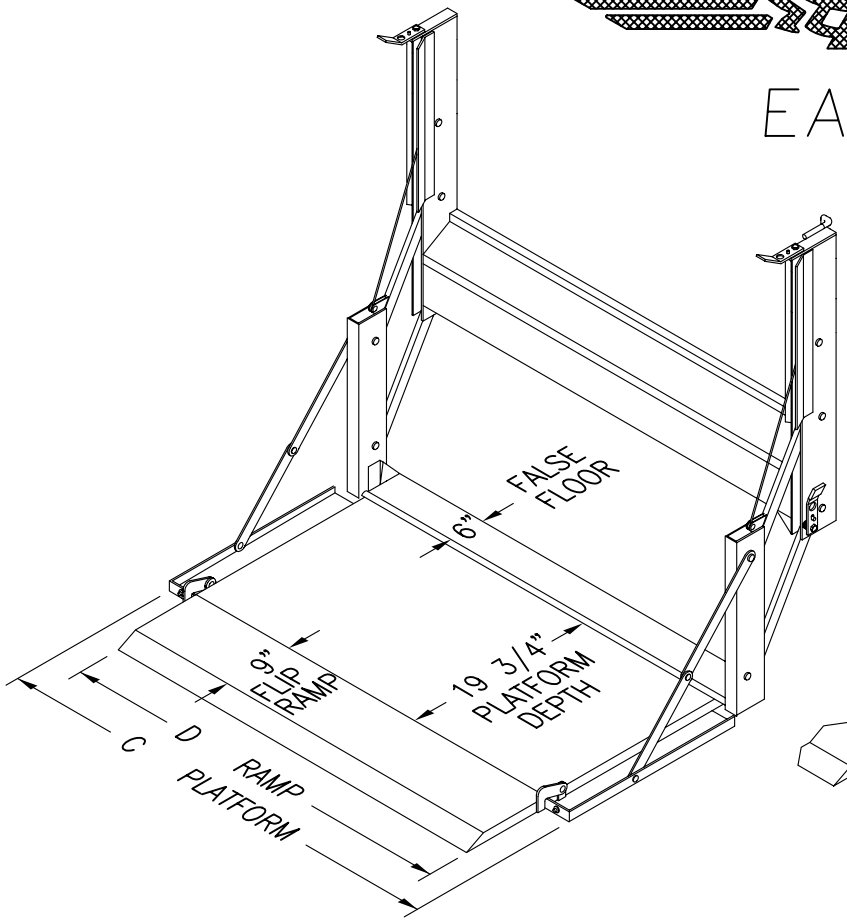

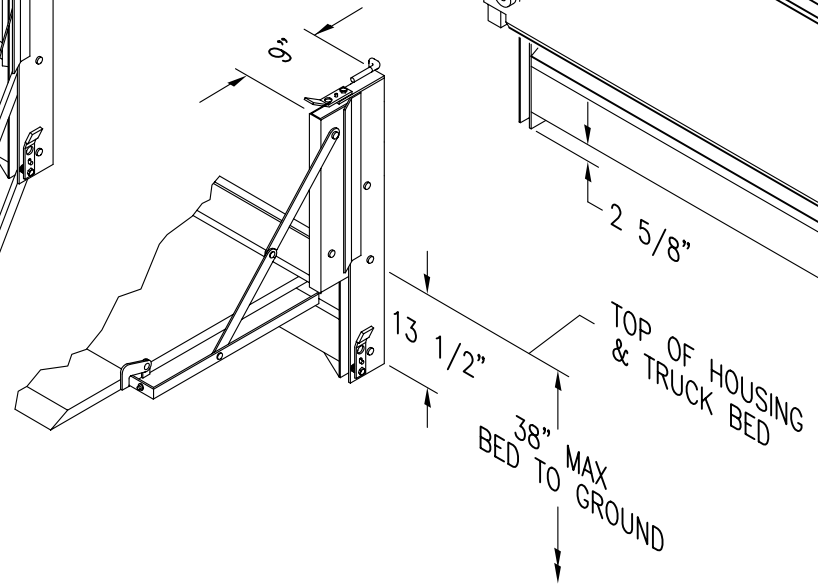

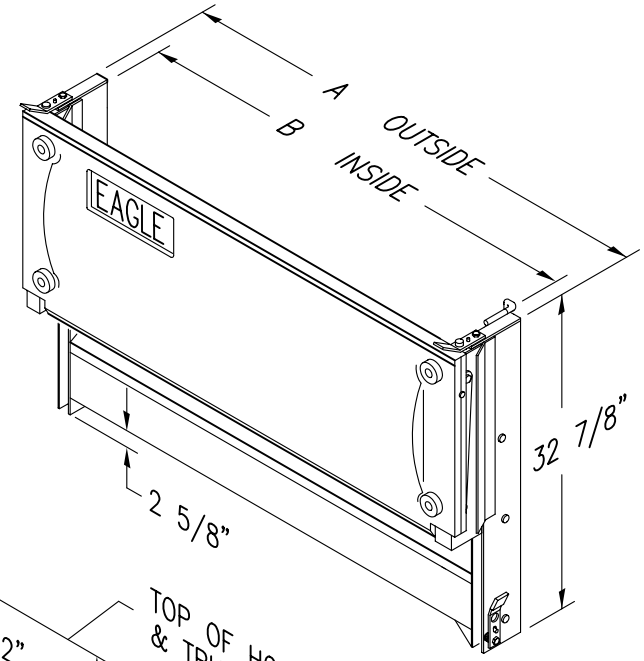

38 SERIES CABLE LIFTGATES (Down Sized Pickups)

STATE MAKE, MODEL, AND YEAR WHEN ORDERING

MODEL	A	B	C	D	*APPROX. WGT.	CG (X)	CG (Y)
E38-48/52	49"	46 1/2"	51 1/2"	45 1/8"	**400#	5 1/2"	15 1/4"
E38-54/58	55"	52 1/2"	57 1/2"	51 1/8"	**440#	5 1/2"	15 1/4"

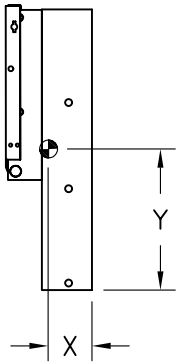

*NOTE: WEIGHTS DO NOT INCLUDE MOUNTING BRACKETS OR HARDWARE

**INCLUDES 9" FLIP AS STANDARD EQUIPMENT

38DN-SZ-SPECS.DWG