EAGLE LIFT

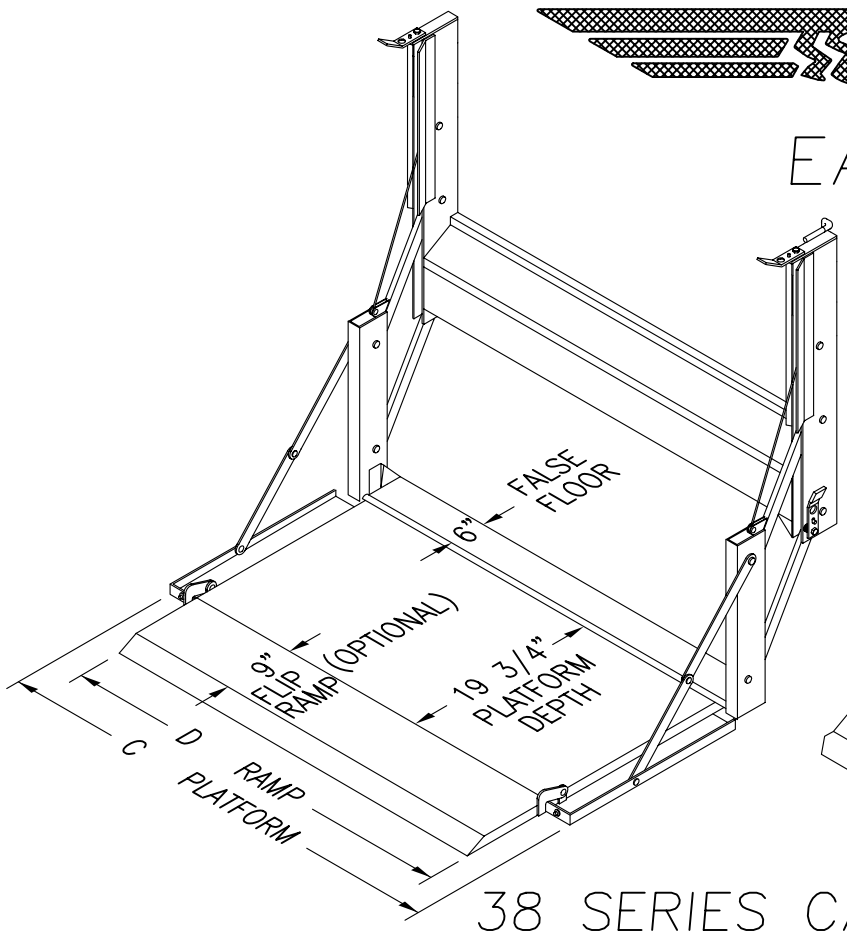

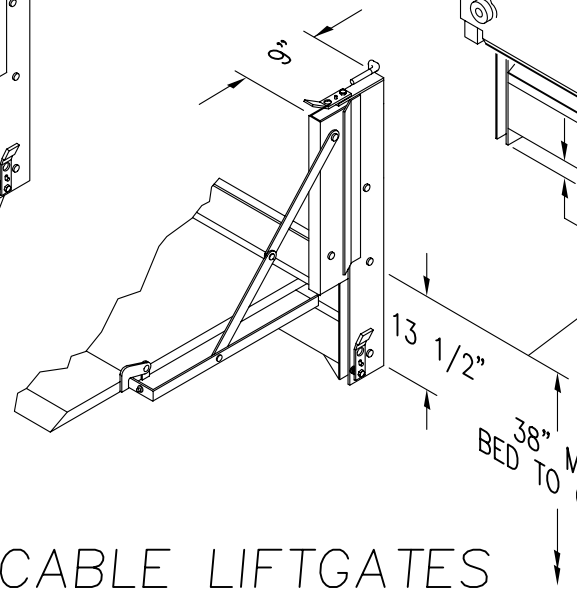

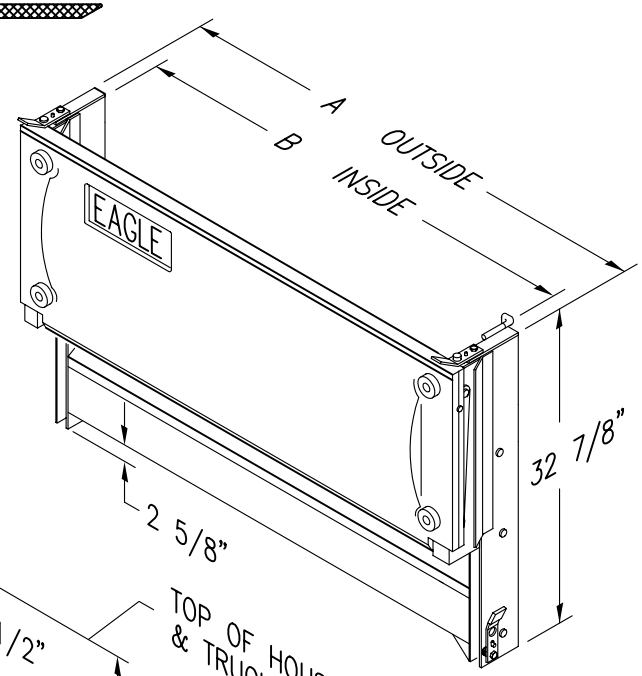

38 SERIES CABLE LIFTGATES

STATE MAKE, MODEL, AND YEAR WHEN ORDERING

MODEL	A	B	C	D	*APPROX. WGT.	CG (X)	CG (Y)	CG (X) FLIP	CG (Y) FLIP
E38-48/49	49"	46 1/2"	51 1/2"	45 1/8"	360#	4 5/8"	15 1/8"	5 7/16"	16 1/8"
E38-54	55"	52 1/2"	57 1/2"	51 1/8"	420#	4 5/8"	15 1/8"	5 7/16"	16 1/8"
E38-58/60	61 1/4"	58 3/4"	63 3/4"	57 3/8"	430#	4 5/8"	15 1/8"	5 7/16"	16 1/8"
E38-64	65 5/8"	63 1/8"	68 1/8"	61 3/4"	435#	4 5/8"	15 1/8"	5 7/16"	16 1/8"
E38-72	71 7/8"	69 3/8"	74 1/4"	68"	**540#	–	–	5 7/16"	16 1/8"
E38-78	80 3/8"	77 7/8"	82 3/4"	76 1/2"	**580#	–	–	5 7/16"	16 1/8"
E38-86	85 7/8"	83 3/8"	88 1/4"	82"	**590#	–	–	5 7/16"	16 1/8"

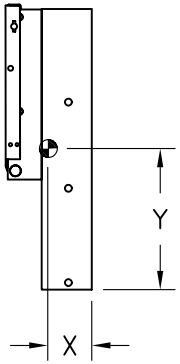

*NOTE: WEIGHTS DO NOT INCLUDE MOUNTING BRACKETS OR HARDWARE
**INCLUDES 9" FLIP AS STANDARD EQUIPMENT

38-SPECS.DWG