EAGLE LIFT

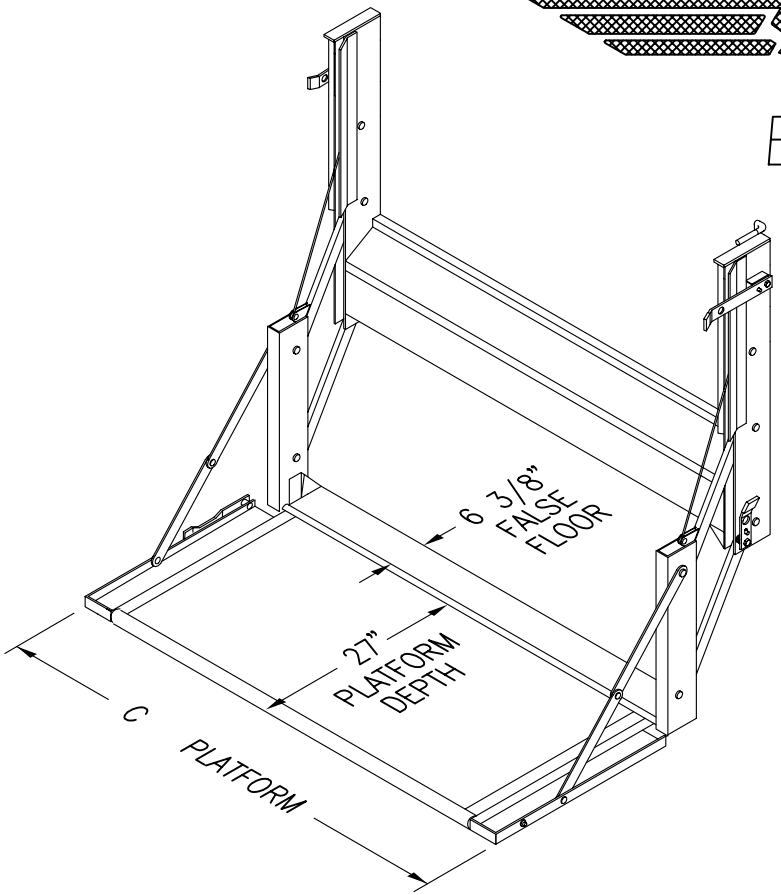

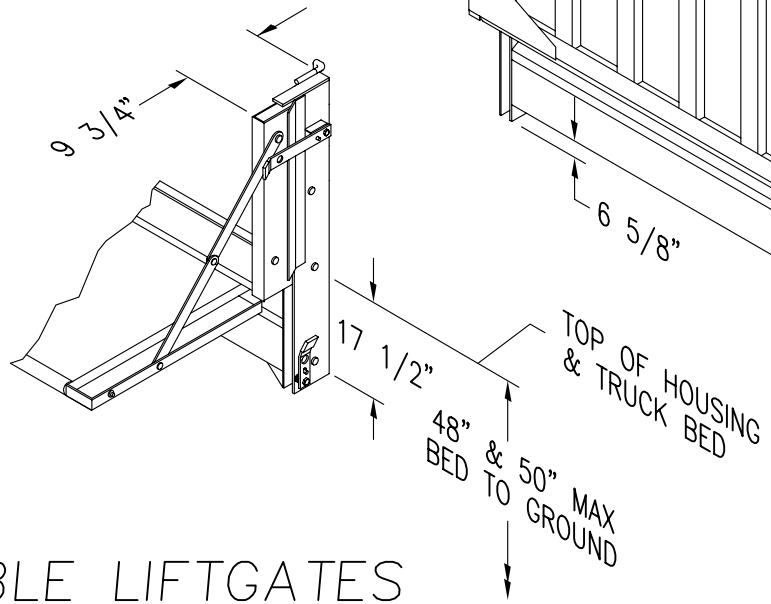

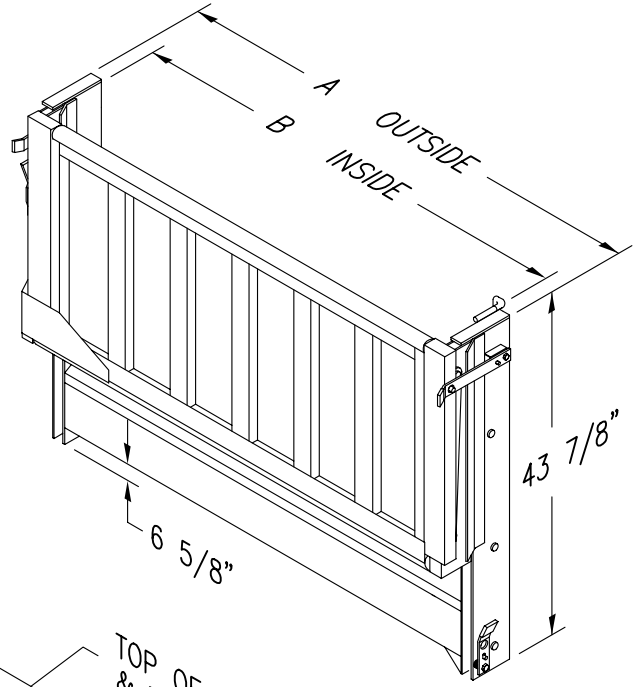

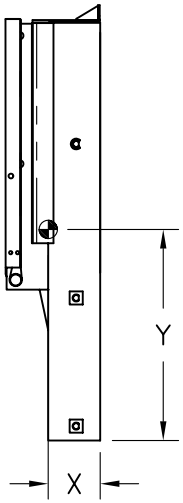

48/50 DE SERIES CABLE LIFTGATES

STATE MAKE, MODEL, AND YEAR WHEN ORDERING

MODEL	A	B	C	*APPROX. WGT.	CG (X)	CG (Y)
E48/50-78DE	80 3/8"	77 7/8"	83 1/8"	655# / 720#	5.42"	22.02"
E48/50-86DE	85 7/8"	83 3/8"	88 5/8"	665# / 735#	5.42"	22.02"
E48/50-91DE	90 7/8"	88 3/8"	93 5/8"	720# / 740#	5.42"	22.02"

*NOTE: WEIGHTS DO NOT INCLUDE MOUNTING BRACKETS OR HARDWARE

48-50DE SPECS.DWG