EAGLE LIFT

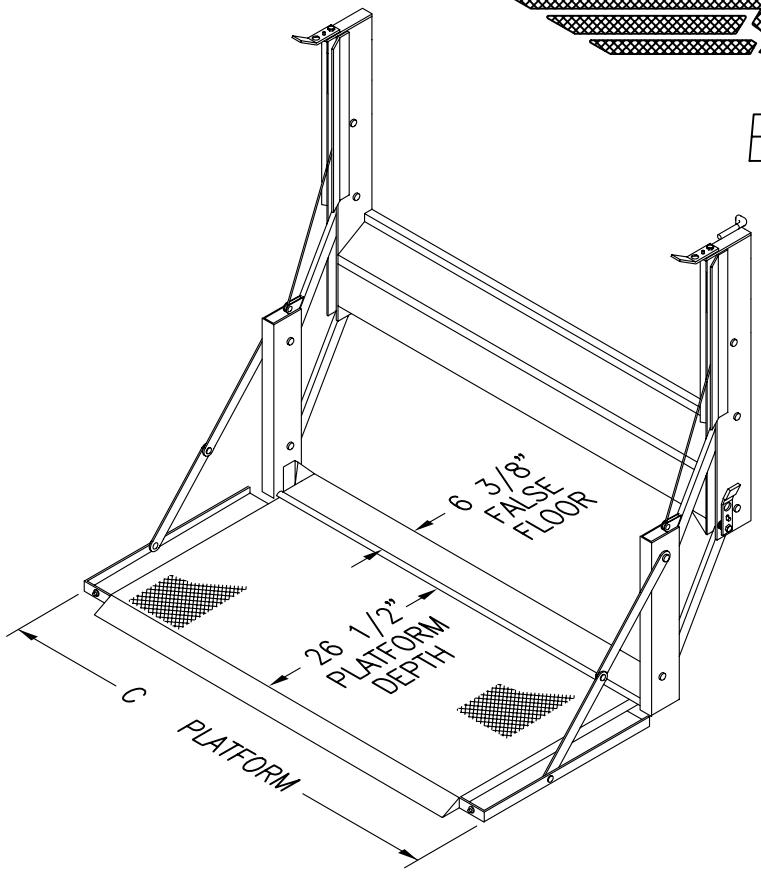

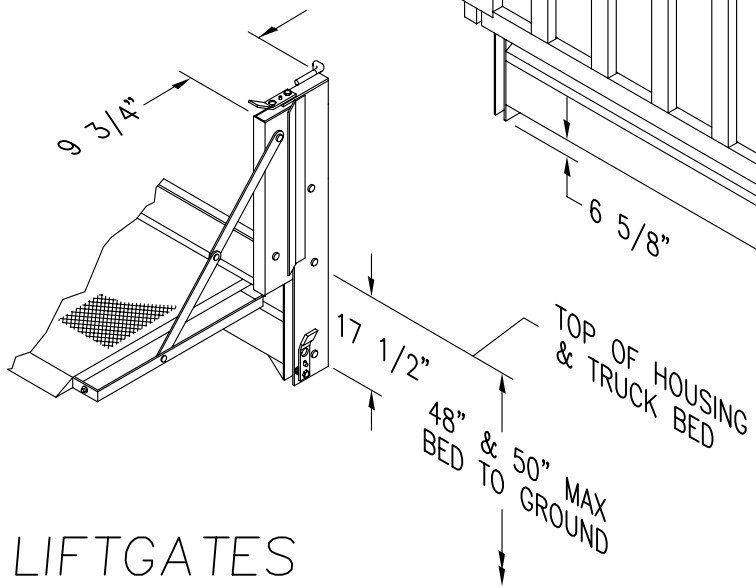

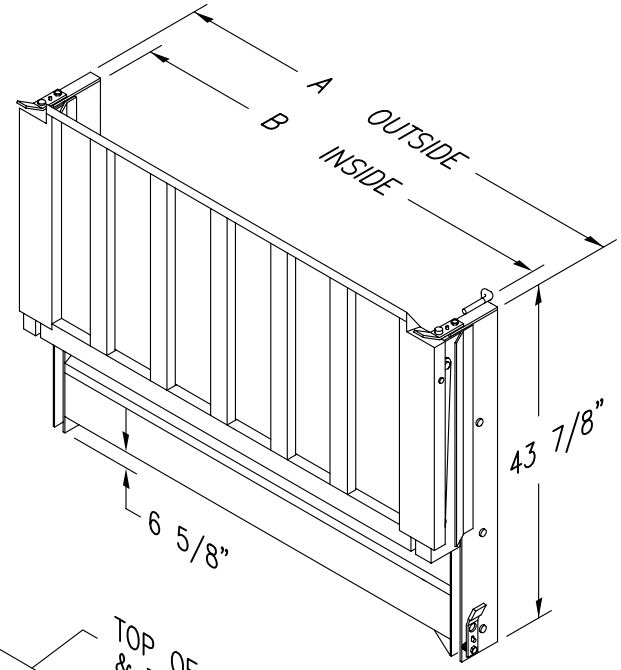

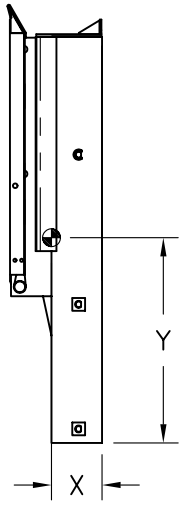

48/50 SERIES CABLE LIFTGATES

STATE MAKE, MODEL, AND YEAR WHEN ORDERING

MODEL	A	B	C	*APPROX. WGT.	CG (X)	CG (Y)
E48-64	65 5/8"	63 1/8"	68"	485#	5.42"	22.02"
E48-72	71 7/8"	69 3/8"	74 1/4"	535#	5.42"	22.02"
E48/50-78	80 3/8"	77 7/8"	82 3/4"	625#/690#	5.42"	22.02"
E48/50-86	85 7/8"	83 3/8"	88 1/4"	660#/710#	5.42"	22.02"
E48/50-91	90 7/8"	88 3/8"	93 1/4"	690#/720#	5.42"	22.02"

*NOTE: WEIGHTS DO NOT INCLUDE MOUNTING BRACKETS OR HARDWARE

48-50SPC.DWG