Weld stem – on boom

Swing assembly on A2B switch to weld stem

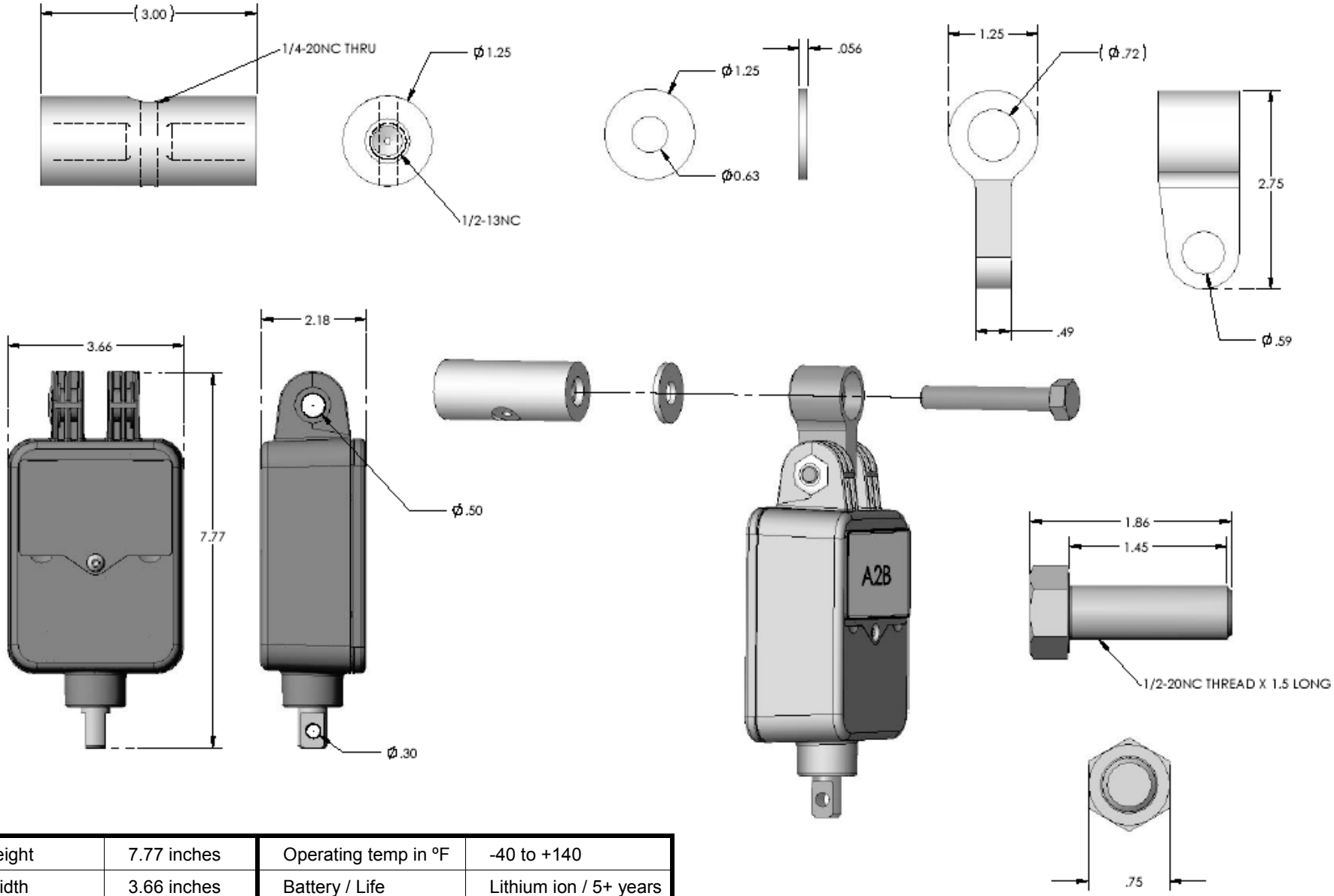

Height	7.77 inches	Operating temp in ºF	-40 to +140
Width	3.66 inches	Battery / Life	Lithium ion / 5+ years
Depth	2.18 inches	FCC compliance	NFBLAB124
Weight	5.50 pounds	Antenna	internal quarter wave

Cranesmart anti-2-block switch and mounting assem.
Installation dimensions and specifications June 2004