EAGLE LIFT

America's Standard in Liftgates

OWNER'S MANUAL

Installation, Operating, Safety, and Maintenance Instructions with Parts Lists

2– CYLINDER DIRECT LIFT LIFTGATE EDL16 SERIES

MODELS EDL16-78, and EDL16-86

1600 # CAPACITY, 50" TRAVEL

ATTENTION:

IT IS IMPORTANT TO FOLLOW THE INSTRUCTIONS SET FORTH IN THIS MANUAL TO ENSURE PROPER OPERATION OF THIS EQUIPMENT.

IMPORTANT:

AS FINAL STAGE MANUFACTURER, INSTALLER OF THIS LIFTGATE IS RESPONSIBLE FOR COMPLIANCE WITH ALL PERTINENT STATE AND FEDERAL SAFETY STANDARDS AS WELL AS FOR FOLLOWING RECOMMENDATIONS OF CHASSIS MANUFACTURER.

EAGLE LIFT

2401 West Broadway

Council Bluffs, IA 51501-3633 U.S.A.

Phone (712) 322-1111 FAX (712) 328-8383

e-mail: //www.eagleliftgates.com

PART #1255078 **JANUARY 2000**

EAGLE LIFT'S LIMITED WARRANTIES

EAGLE LIFT LIFTGATES

These warranties cover the following products: all models of liftgates manufactured by Eagle Lift.

3-YEAR LIMITED WARRANTY

Eagle Lift warrants to the original owner that the pump and motor unit used in this products shall be free from defects in material and workmanship for THREE YEARS from the date of purchase. If such a defect appears during the warranty period, Eagle Lift will repair or replace (at its option) these components without charge if applicable claim procedures are followed.

1-YEAR LIMITED WARRANTY

As to defects not related to the components specified above, Eagle Lift warrants to the original owner that this product shall be free from defects in material and manufacturing workmanship for ONE YEAR from the date of purchase. If such a defect appears during the warranty period, Eagle Lift will repair or replace (at its option) your product without charge if applicable claim procedures are followed.

The product must be properly installed, maintained, and serviced in order to eligible for warranty.

The warranties apply only to Eagle Lift manufactured products and exclude add-on attachments and modifications.

The warranties do not cover defects or damage to products that have been improperly installed, abused, misused, or damage caused by the carrying of corrosive materials or by reason of an accident.

The above stated warranties are exclusive. There are no warranties which extend beyond the above stated warranties. There are no implied warranties of merchantability or fitness for any purpose. Incidental damages and consequential damages are excluded.

Claims may be made by contacting an authorized Eagle Lift distributor, or Customer Service Department, Eagle Lift, P.O. Box 876, Council Bluffs, IA 51502. All claims must be made in writing on the proper form submitted to Eagle Lift.

Eagle Lift or its authorized representative reserves the right to inspect products claimed to be defective for warranty purposes and dispose of the claim as it sees fit, including repair or replacement. Unauthorized repair or replacement prior to inspection may void the warranty.

All products or components claimed to be defective must be returned to the factory for warranty consideration within 30 days of the claim. All items shipped out from the factory for warranty reasons will be sent freight prepaid and all items returned to the factory for warranty must be sent freight prepaid.

Labor performed for warranty reasons must be done by an authorized Eagle Lift distributor or by a person or company pre-approved by Eagle Lift in writing.

Foreword

This manual provides installation and operating procedures to help you obtain efficient and dependable use from your Eagle Lift Liftgate. This manual also contains specifications, parts lists, maintenance information, safety suggestions, and other general information.

Please read this manual carefully and understand it before attempting to install, operate, maintain, or repair your liftgate. Keep this manual with the liftgate for future reference. If at any time you have any questions you should contact your Eagle Lift dealer. The dealer has trained service technicians and Eagle Lift replacement parts to keep your Eagle Lift liftgate in top operating condition at all times.

Throughout this manual you will see the following symbol: ⚠ This is the Safety-Alert Symbol:

Meaning: ATTENTION! BECOME ALERT! YOUR SAFETY IS INVOLVED!

The terms **CAUTION!**, **WARNING!**, and **DANGER!** are used in conjunction with the Safety-Alert Symbol to identify the hazard level for items of personal safety.

⚠ **CAUTION! means hazards or unsafe practices that could result in minor personal injury or product or property damage.**

⚠ **WARNING! means hazards or unsafe practices that could result in severe personal injury or death.**

⚠ **DANGER! means immediate hazards that will result in severe personal injury or death.**

⚠ **SAFETY FIRST!!!** ⚠

Before using an Eagle Lift Liftgate, you should consult all applicable safety standards and instruct the operator fully in its use. Be sure that all personnel who intend to operate the liftgate read and understand this manual fully and comply with it and all safety standards.

TABLE OF CONTENTS

Introduction ..... Page 1
General Specifications and Capacities ..... Page 2
Figure 1 - Liftgate Terms ..... Page 3

Operating Instructions ..... Page 4
Figure 2 - Liftgate ..... Page 4
Figure 3 - Control Switch ..... Page 4
Figure 4 - Platform Drop-away ..... Page 5

Service and Maintenance ..... Page 6
Cylinder Seals Replacement ..... Page 7
Figure 5 - Cylinder Assembly Diagram ..... Page 8

Liftgate Troubleshooting ..... Page 9
Figure 6 - Toggle Switch Wiring Diagram ..... Page 11
Figure 7 - Hand Held Push Button Wiring Diagram (Optional) ..... Page 12
Figure 8 – Hydraulic Schematic Diagram ..... Page 13

Installation Instructions ..... Page 14
Stake Body and Van Body Preparation ..... Page 14
Figure 9 - Mount Angle Location ..... Page 14
Figure 10 - Angle Brace Location ..... Page 15
Mounting Liftgate ..... Page 16
Figure 11 - Stake Body (Welding) ..... Page 16
Figure 12 - Stake Body (Bolting) ..... Page 16
Figure 13 - Van Body (Weld-on) ..... Page 17
Figure 14 - Van Body (Bolt-on Type “A”) ..... Page 17
Figure 15 - Van Body (Bolt-on Type “B”) ..... Page 18
Figure 16 – Main Housing Bolting ..... Page 19
Electrical Connections ..... Page 20
Figure 17 - Battery Cable Installation ..... Page 20
Figure 18 – Electrical Wiring Connections ..... Page 22
Verifying Operation ..... Page 23
Final Inspection Checklist ..... Page 23

Decal Placement ..... Page 24
Figure 19 - Decal Locations ..... Page 24
Figure 20 - Decal Descriptions ..... Page 25

Parts Breakdown ..... Page 26
Figure 21 ..... Page 26

Parts List ..... Page 27
Figure 22 ..... Page 27

EAGLE LIFT

INTRODUCTION

Thank you for purchasing an Eagle Lift Liftgate. Eagle Lift liftgates are the finest on the market today. In order to provide years of service, it is very important that you operate and maintain your liftgate properly.

This manual contains information necessary for the proper operation and maintenance of your Direct Lift 2-Cylinder liftgate. If you require service for repairs other than simple routine maintenance, please take your liftgate to an authorized **Eagle Lift Servicing Distributor**. If you need information for an Eagle Lift Servicing Distributor in your area, please contact us at:

Eagle Lift
P.O. Box 876
2840 Nebraska Ave.
Council Bluffs, IA 51501
Phone: (800) USA-GATE or (712) 322-1111
Fax: (712) 328-0026
http://www.eagleliftgates.com

Before operating the liftgate, please study this manual carefully and keep it in a handy place for future reference. Above all remember – **SAFETY FIRST!**

1. Always stand clear of liftgate when operating. Make certain FEET and HANDS are clear of space between liftgate and truck when raising, and clear of space between liftgate and ground when lowering. Also, keep away from lifting linkage (arms) when liftgate is in operation.

2. This is not a passenger lift – **DO NOT RIDE!**

3. ⚠ **CAUTION!** Improper operation can result in serious injury – read operating instructions before use.

4. Any alteration of liftgate voids warranty and may void compliance with the Federal Motor Vehicle Safety Standards (FMVSS).

5. Only authorized, properly trained adults should operate this liftgate.

6. When not in use, always store the platform in closed position with both storage lock latches secured.

7. Never leave liftgate unattended with parking lights **"ON"** or key in ignition.

8. Decals must remain on liftgate for safety purposes. Replace any damaged or missing decals immediately.

9. Never exceed rated load capacity. Always center load on platform and as close to truck as possible.

10. Always disconnect negative (–) battery cable terminal when welding on liftgate or truck.

EAGLE LIFT

GENERAL SPECIFICATIONS AND CAPACITIES

OVERALL HEIGHT	47”
OVERALL WIDTH:	
MODEL EDL16-78	85 3/4”
MODEL EDL16-86	91 1/4”
WIDTH BETWEEN UPRIGHTS:	
MODEL EDL16-78	74 1/2”
MODEL EDL16-86	80”
TRUCK BED TO BOTTOM OF UPRIGHT	19 1/2”
RATED PLATFORM TRAVEL	50”
RATED LOAD CAPACITY, (both lifting and lowering) (spread load out uniformly about center of platform)	1600 lbs.
DUAL HYDRAULIC CYLINDER SIZE	2 1/2” BORE x 18” STROKE
PUMP/MOTOR RESERVOIR CAPACITY	approx. 334 cu. in.
PUMP OPERATING PRESSURE	1250 psi max.
ELECTRICAL SYSTEM	12 volt, 180 amp. max. draw @ 1250 psi

EAGLE LIFT

LIFTGATE TERMS

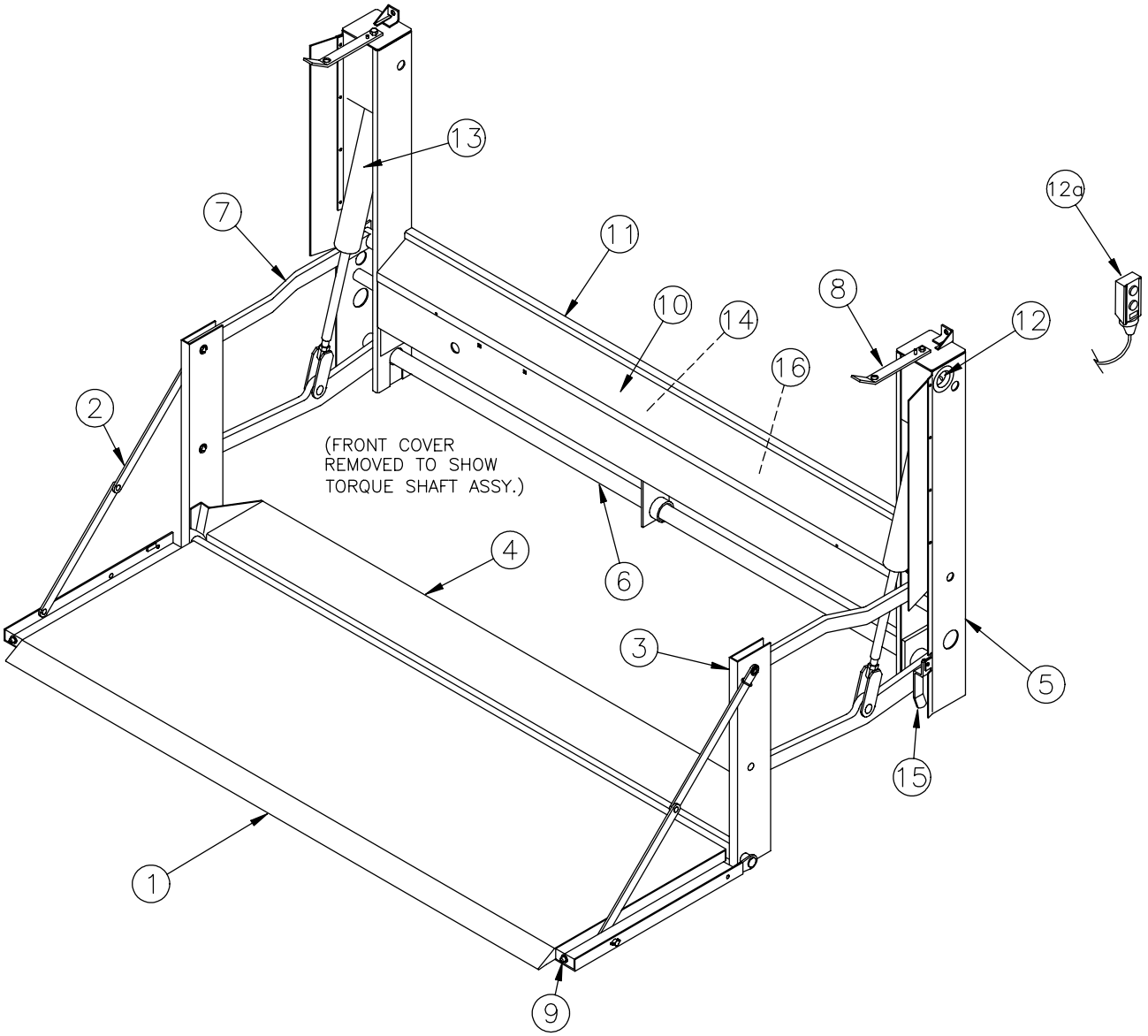

ITEM	DESCRIPTION	ITEM	DESCRIPTION
1	PLATFORM	10	MAIN HOUSING COVER
2	PLATFORM SUPPORT LINKS	11	MAIN HOUSING
3	PLATFORM UPRIGHT	12	CONTROL SWITCH
4	FALSE FLOOR	12a	(OPTIONAL) HAND HELD REMOTE CONTROL
5	MAIN HOUSING UPRIGHT	13	HYDRAULIC CYLINDER ASSEMBLY (2)
6	LOWER LIFT ARM/TORQUE SHAFT ASSY.	14	HYDRAULIC POWER UNIT (inside main housing)
7	UPPER PARALLEL ARM	15	FOLD DOWN LATCH
8	STORAGE LATCH	16	RELAY / ELECTRICAL HARNESS SYSTEM
9	STORAGE LATCH PIN		(inside main housing)

Figure 1

EAGLE LIFT

OPERATING INSTRUCTIONS

1. To operate the liftgate, turn the vehicle's PARKING LIGHTS **"ON"**. This will activate the electrical system on the liftgate, supplying 12 VDC power.

2. Unlatch left (RDSD) storage latch by lifting up and turning outward.

3. Unlatch right (CBSD) storage latch by lifting up. Manually lower platform down to level position.

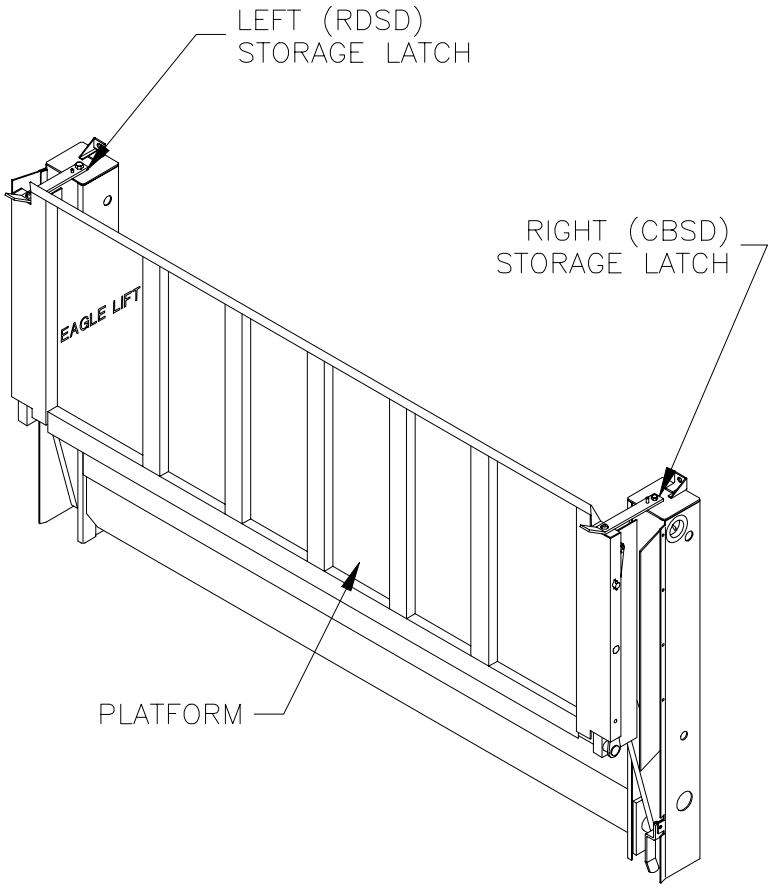

Figure 2

4. **<u>To lower platform to ground:</u>** Press down on control switch. You may stop platform at any desired height by releasing control switch (switch should automatically return to neutral position upon release).

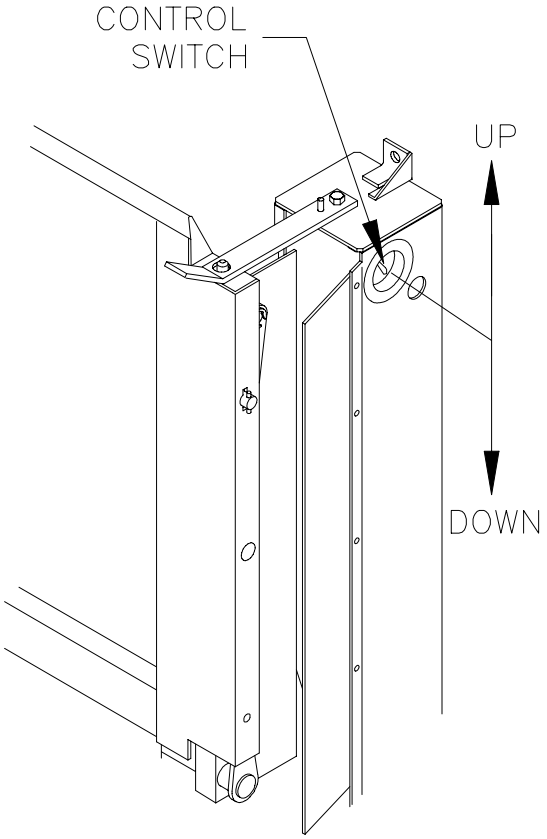

Figure 3

5. **<u>To raise platform to truck bed:</u>** Lift up on control switch. (**<u>NOTE:</u>** An audible safety alarm sounds when you raise liftgate. This is an important safety feature for benefit of operator and public).

6. **<u>To store gate:</u>** Raise platform until level with truck bed. Manually lift platform to closed position. CBSD storage latch will engage latch pin with pressure on platform. Lift and pivot RDSD storage latch onto platform latch pin.

7. When finished using the liftgate, turn the vehicle's PARKING LIGHTS **"OFF"**. This will disconnect the power to the liftgate.

EAGLE LIFT

1. **<u>To place platform in drop-away position:</u>**
   Manually lift platform and at same time, lift RDSD platform link support upward at hinge point. This allows keyhole of platform and link support pin to line up. Disconnect link support from platform. Repeat procedure for CBSD link support. Platform will now drop-away for dock or forklift loading. Secure platform with fold-down latch (located near bottom of CBSD upright).

⚠ <u>CAUTION!</u> PLATFORM IS SPRING LOADED AND UNDER CONSIDERABLE COMPRESSION WHEN LOCKED IN DOWN POSITION FOR DOCK LOADING. USE EXTREME CARE WHEN LATCHING AND UNLATCHING TO PREVENT INJURY.

⚠ <u>CAUTION!</u> USE OF DROP-AWAY IS <u>ONLY</u> FOR LOADING AT DOCKS OR WITH FORKLIFTS. <u>DO NOT</u> STORE PLATFORM IN THIS POSITION!

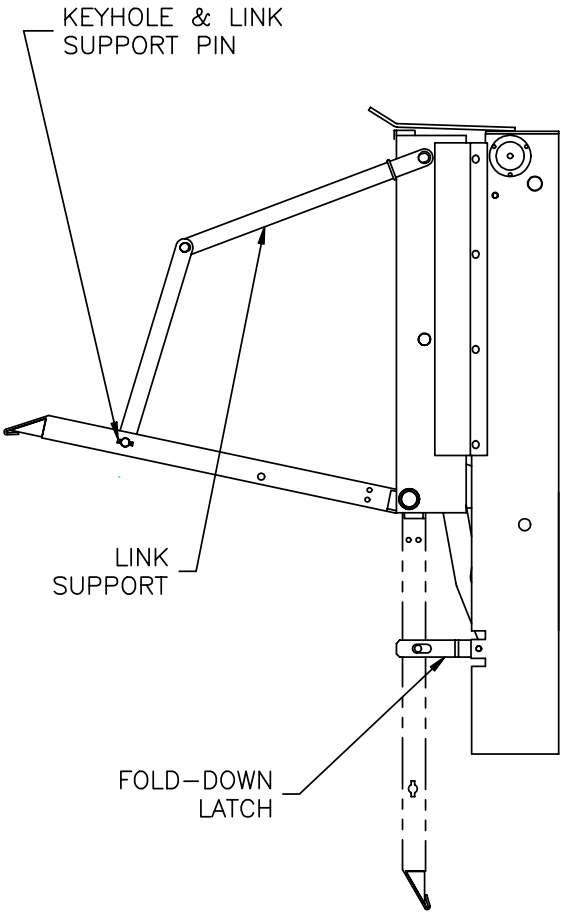

Figure 4

EAGLE LIFT

SERVICE AND MAINTENANCE

A. Preventative and Regular Service:

1) Check pins and retaining rings for wear and damage.

⚠ **CAUTION! REPLACE IMMEDIATELY IF MISSING OR IF ANY SIGN OF WEAR IS OBSERVED.**

2) Inspect all pins, shafts, retaining rings, bolts, nuts, and roll pins.

⚠ **CAUTION! REPLACE IMMEDIATELY IF MISSING OR IF ANY SIGN OF WEAR IS OBSERVED.**

3) Inspect all welds for cracks or fatigue. If found, repair welds as required (recommend taking to an authorized Eagle Lift distributor).

4) Check oil level in reservoir of pump/motor assembly.

   a) Proper fluid level is approximately 1 1/4" below top of reservoir tank with cylinders fully extended (platform lowered to ground).

   b) Fill reservoir with an ISO grade 32 hydraulic oil (equivalent to 10 W). Use a special high viscosity oil in cold weather climates. (Unit shipped with Arctic Flo™ Hydraulic Oil).

5) Inspect fittings, hoses, pump assembly, and cylinders for leakage. Repair or replace as needed. (See Cylinder Seals Replacement Section, Page 7 thru 8).

6) Inspect all electrical connections for tightness, corrosion, or damage. Make repairs as necessary.

   a) Check battery terminals for proper connections, tightness, and corrosion.

   b) Inspect battery cell fluid levels according to manufacturer's instructions.

B. Checklist for safety features:

1) Warning alarm sounds when gate is lifting.

2) Gate does not operate unless parking lights are **"ON"**. Make sure to shut parking lights **"OFF"** when finished using liftgate.

3) When stored, safety storage latches hold liftgate platform securely in place.

4) All decals are in place and undamaged.

EAGLE LIFT

CYLINDER SEALS REPLACEMENT (See Figure 5, Page 8)

⚠ **CAUTION! CYLINDER REBUILD SHOULD ONLY BE DONE BY AN AUTHORIZED DEALER OR SKILLED PROFESSIONAL FAMILIAR WITH HYDRAULIC PRODUCTS. CONTACT FACTORY BEFORE ATTEMPTING REPAIR.**

1. Lower platform to ground and remove main housing cover.

2. Remove hose from pump fitting.

3. Remove cylinder (with hose attached) from liftgate upright housing.

4. Clamp cylinder in a vise. Do not over clamp! Place hose end into a container to catch hydraulic fluid and stroke cylinder back and forth to empty all fluid inside.

5. Remove (3) bolts and snap ring holding cylinder shaft gland in place.

6. Pull cylinder shaft, gland, and piston assembly out of cylinder case.

7. Remove piston lock nut from cylinder shaft. Remove piston and gland from shaft.

8. Replace seals:

a. Remove all seals and o-rings from both piston and gland. Note location of each.

b. Install new o-rings and seals on gland. Slide shaft through gland. (See Figure 5, Page 8 for proper direction of gland onto shaft. Wiper seal goes toward clevis end).

c. Install new o-ring and back-up rings on piston. DO NOT allow piston seals to twist when installing into piston groove. Replace piston onto cylinder shaft. (See Figure 5, Page 8).

d. Apply Loctite™ to piston nut threads and replace nut onto cylinder shaft. Torque nut to 80-90 ft-lbs.

9. Apply lubricant to piston and gland seals. Reinsert cylinder shaft, gland, and piston assembly into cylinder case.

10. Replace snap ring and bolts to secure gland in place. Do not over tighten bolts.

11. Reinstall cylinder into upright housing; feeding hose into main housing. Reinstall cylinder pins and clip rings.

12. Apply pipe thread sealant to hose end and reconnect to pump fitting.

13. Operate liftgate up and down several times to purge air out of cylinder, lower liftgate to ground, and fill reservoir to recommended level.

EAGLE LIFT

CYLINDER ASSEMBLY DIAGRAM

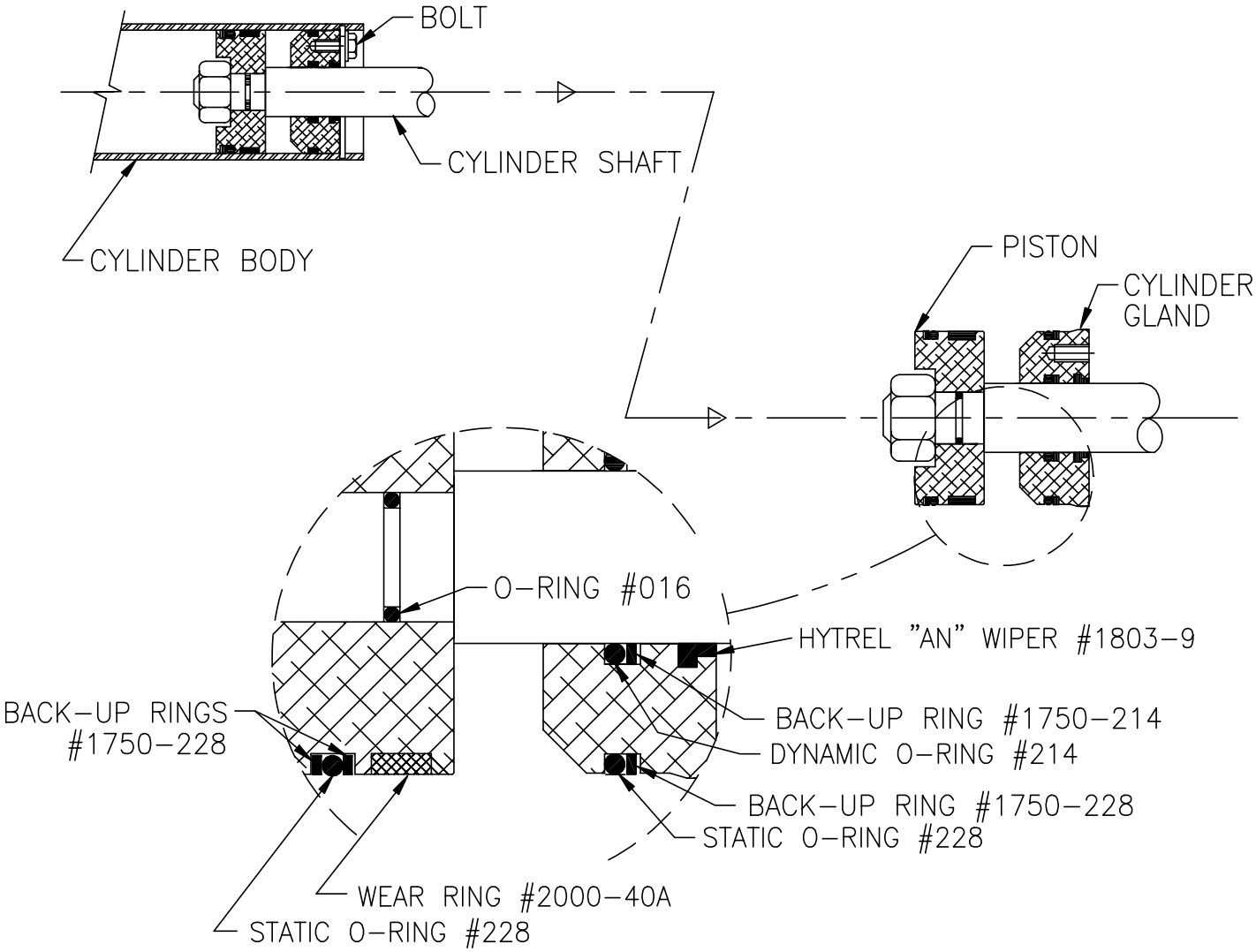

Figure 5

LIFTGATE TROUBLESHOOTING

1. **Liftgate does not raise to proper height, but unit is still running:**

   a. Check fluid level in reservoir. Add fluid if level is more than 1 1/4" below top of reservoir tank with cylinders fully extended.

   b. Platform overloaded. Remove some or all of load.

   ⚠ **CAUTION! DO NOT EXCEED 1600 LB. LIMIT OF LIFTGATE!**

2. **Platform will not raise, but warning alarm is working:**

Indicates that there is electrical power to unit, but not enough to raise liftgate.

   a. Battery charge is low. Start vehicle so alternator will supply enough charge to raise platform. Charge battery or replace with a higher amp output battery.

   b. Problem in vehicle's electrical charging system. Diagnose and repair as necessary.

3. **Platform will not raise and warning alarm is not working:**

   a. **Check electrical system:**

      1) Check for blown fuse. Replace 2 amp fuse in liftgate wiring harness. (See Figures 6 and 7, Pages 11 and 12).

      2) Relay unit defective. Turn parking lights **"ON"**. Use a test light to check for 12 VDC at center terminal on control switch or small terminal on pump/motor solenoid (green wire). If 12 VDC is present through the 2 amp fuse and not present at the switch, the relay unit is faulty. Replace the relay and/or harness assembly. (See Figures 6 and 7, Pages 11 and 12).

      ⚠ **WARNING! REPLACE DEFECTIVE RELAY AND/OR HARNESS ASSEMBLY IMMEDIATELY!**

   b. **Short in electrical cable:**
      Electrical cable pinched or cut by a sharp object on truck frame or burned by exhaust system. The 150 amp circuit breaker will be tripped (located under vehicle hood by battery). Repair the problem as necessary, reset the 150 amp circuit breaker, and check for proper operation..

   ⚠ **WARNING! SHORTING OF ELECTRICAL CABLE MAY CAUSE EXTENSIVE DAMAGE TO VEHICLE'S ELECTRICAL SYSTEM!**

   c. **Short in remote wiring system:**
      Wire pinched or cut by sharp object in liftgate housing or by cable lifting system. Relay and/or harness 2 amp fuse may fail (See 3a above). Repair wire, replace 2 amp fuse, and test system for proper operation.

d. **Bad solenoid on liftgate pump/motor:**
Replace solenoid and check all the following items:

1) Battery charge low. Charge battery or replace with higher amp output battery. Check vehicle's electrical charging system.

2) Poor connection on battery terminals. Tighten terminal connections or replace cables.

3) Poor ground from battery to vehicle frame. Inspect ground connection and repair as necessary.

4) Electrical short in vehicle's or liftgate's electrical wiring system. See 3b and 3c above.

5) Poor grade replacement electrical wiring. Use only good quality, 105° C approved electrical wire.

6) Use di-electric grease on all terminals to prevent corrosion and poor electrical connections.

NOTE: If you have trouble with this product and are unable to make repairs, please consult an authorized distributor or the factory.

⚠ **WARNING! REPLACE ALL ABUSED OR MALFUNCTIONING PARTS IMMEDIATELY!**

EAGLE LIFT

ELECTRICAL WIRING DIAGRAM

MANUAL CONTROL (Toggle Switch)

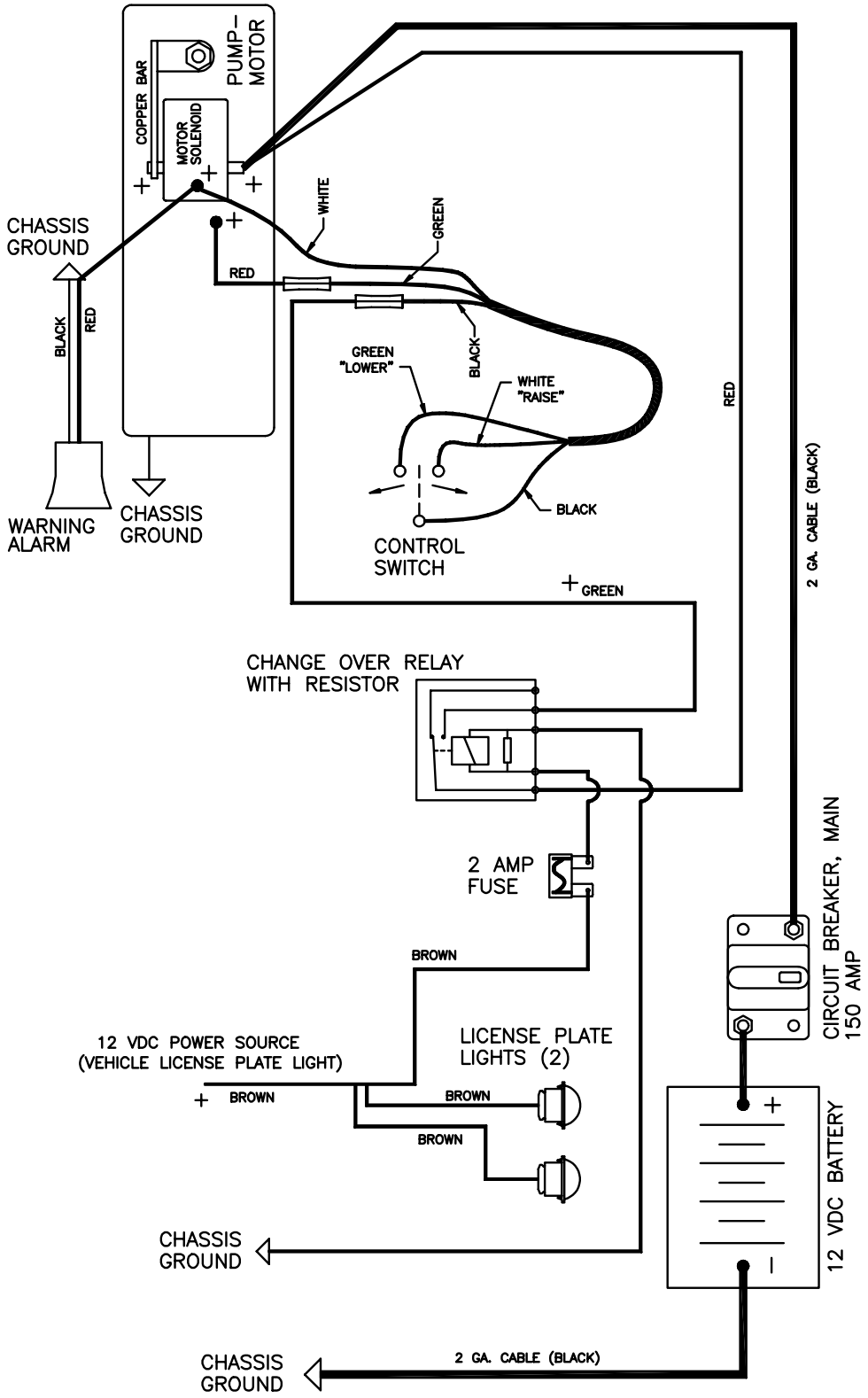

Figure 6

EAGLE LIFT

ELECTRICAL WIRING DIAGRAM

OPTIONAL REMOTE CONTROL (Hand Held Push Button)

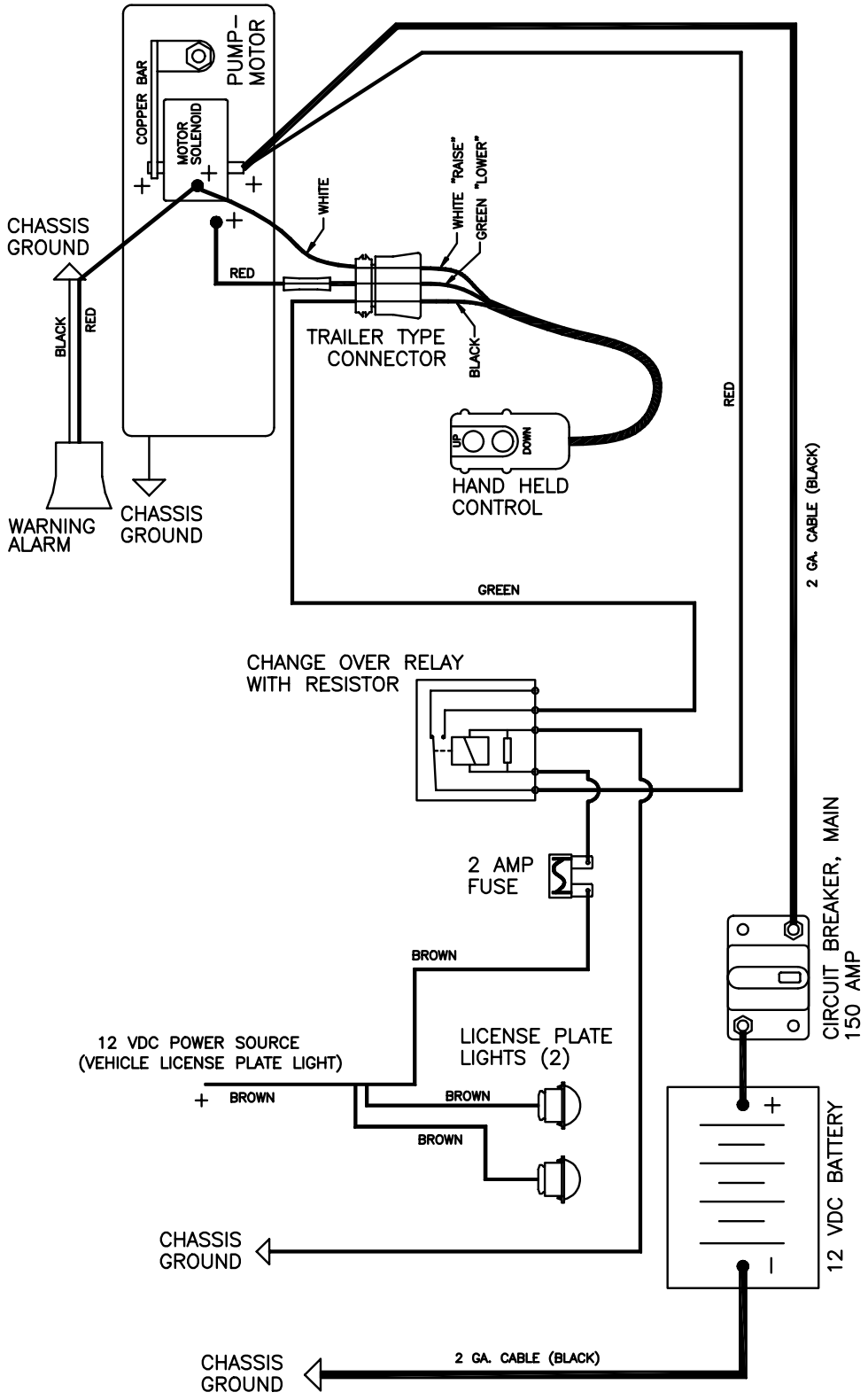

Figure 7

EAGLE LIFT

HYDRAULIC SCHEMATIC DIAGRAM

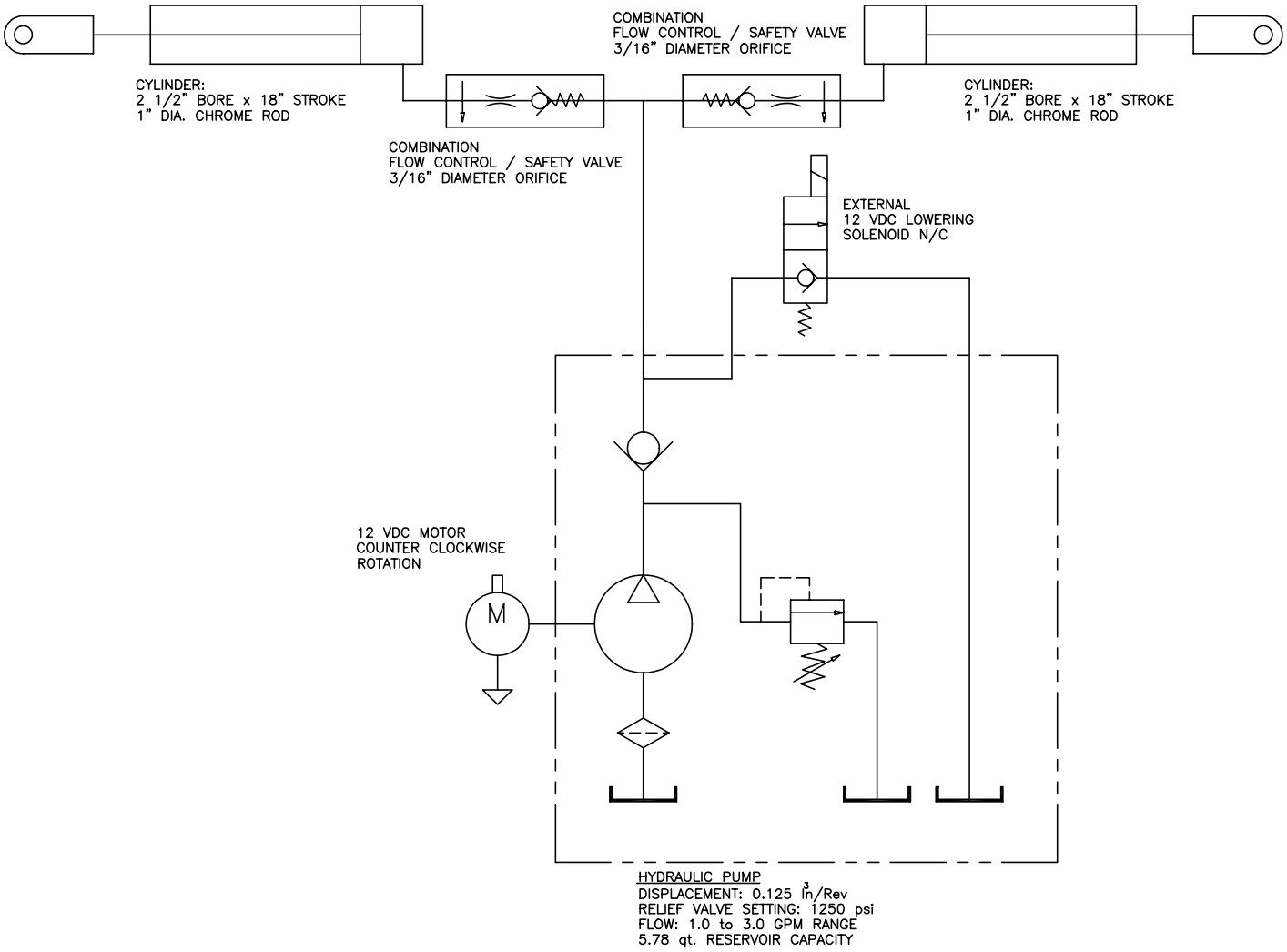

Figure 8