Introduction **3**

Ordering Parts **3**

VMAC Warranty **3**

Safety Precautions **5**

Installation Instructions 6

System Specifications **7**

Operating Principles **8**

Oil Separation and Cooling 8

Filtration 8

Belt Alignment and Tensioning 9

Pressure Regulation and Engine Speed Control 9

Safety Devices 9

Line Protection 10

Special Installation Notes 10

System Operation **11**

Cold Climate Operation 13

Automatic Shutdown 13

Adding Oil to the System 13

Adjusting the System **15**

Adjusting the Pressure Regulator 16

Electronic Throttle Control Adjustment 17

Adjusting the Pneumatic Throttle Controller 19

Routine Maintenance **21**

Maintenance Schedule 21

Inspect the Drive Belt 22

Replacing the Air Filter 22

Replacing the Oil Filter 23

Changing Compressor Oil 24

Changing the Coalescing Filter 25

Problem Diagnosis **29**

Owner Manual - Document #1930060

VR70 and VR140 Systems

Changes and Revisions

Version	Revision Details	Revised	Approved	Implemented
00	Initial draft, revised to completion	IB 27 Jan 2004	SC 16 Mar 2004	16 Mar 2004
a	Added coalescing information	IB 19 Apr 2005	SM 27 Apr 2005	29 Apr 2005
b	Warranty information change	IB 18 Apr 2006	SM 19 Apr 2006	20 Apr 2006
c	ECN 06-220 Coalescing spring	IB 25 Oct 2006	SM 28 Oct 2006	30 Oct 2006
d	ECN 07-009 phone & general	IB 10 Jan 2007	RD 26 Jan 2007	29 Jan 2007
e	ECN 07-099 lack of use failure	IB 18 Jun 2007	SC 18 Jun 2007	24 Jun 2007

Manuals are subject to change without notice.

Registered Trademarks

All trademarks used in this manual are the property of the respective copyright holder.

Copyright 2007
The contents of this manual may not be reproduced in any form without the express written permission of VMAC
Printed in Canada

1333 Kipp Road, Nanaimo, BC V9X 1R3
1-888-241-2289

Introduction

This manual provides operation instructions, specifications, adjustment, maintenance and warranty information for the VMAC VR70 and VR140 underhood air compressor, VMAC pneumatic Throttle Controller and VMAC Electronic Throttle Controller.

Ordering Parts

To order parts, contact your VMAC dealer. Your dealer will ask for the VMAC serial number, part number, a description of the part and the quantity. To locate your nearest dealer, call 1-888-241-2289.

VMAC Warranty

1. GENERAL PROVISIONS AND LIMITATIONS

1.1 VMAC, Division of Mangonel Investments Corporation, (hereafter ”VMAC”) warrants to each original retail purchaser (hereafter “Buyer”) of its new Underhood Air Compressor Systems (hereafter “Product(s)”) from VMAC or its authorized Dealers that such Product(s) are, at the time of delivery to the Buyer, free of manufacturer defects in material and workmanship.

1.2 Product Warranty – Underhood Air Compressors applies to Products(s) manufactured on or after January 1, 2005. (System ID numbers ending with TA001 or greater).

2. NO WARRANTY IS MADE WITH RESPECT TO

2.1 Any Product(s) which have, in VMAC’s judgment, been subject to negligence, accident or improper storage, installation, application, operation or maintenance, or have been repaired or altered in such a way that affects the Product(s) adversely.

2.2 Components or accessories manufactured, warranted and serviced by others.

2.3 Damages caused from normal maintenance service and repairs and corrections with minimum action, such as adjustments and inspections, or replacement of items, such as service filters, belts, seals and service kits.

2.4 Consequential damages caused by Product(s) failure.

2.5 Any Product(s) if other than VMAC’s genuine components are used in the Product(s).

2.6 Normal wear and tear of Product(s).

3. WARRANTY PERIOD

3.1 The warranty period will commence upon installation of the Product(s). The returned warranty registration form marks the date of installation. If the warranty registration form has not been received by VMAC within 6 months from the date of installation of the Product(s), then the warranty period will be deemed to commence 30 days from date of shipment from VMAC. For the full warranty period to apply, installation of Product(s) must be completed within 36 months from the date of shipment of the Product(s) from VMAC.

3.2 The following components of Product(s) are warranted against manufacturer defects in materials and workmanship for a period of 24 months or 2,000 hours of operation, whichever expires first: Compressor, Brackets, Air/Oil Separator Tank and Oil Cooler.

3.3 All other components of Product(s), not listed in 3.2, are warranted against manufacturer defects in materials and workmanship for a period of 12 months or 1,000 hours of operation, whichever expires first.

3.4 Replacement components of Product(s) listed in 3.2, excluding VMAC factory rebuilt components, shall be warranted for the remainder of the original warranty period. If the original warranty period has expired, replacement components of Product(s) listed in 3.2 and purchased by Buyer, excluding VMAC factory rebuilt components, shall be warranted for a period of 12 months or 1,000 hours of operation, whichever expires first.

3.5 VMAC factory rebuilt components shall be warranted for a period of 6 months from date of shipment from VMAC.

3.6 Replacement components of Product(s) listed in 3.3, shall be warranted for the remainder of the original warranty period. If the original warranty period has expired, replacement components of Product(s) listed in 3.3 and purchased by Buyer, shall be warranted for a period of 12 months or 1,000 hours of operation, whichever expires first.

4. VMAC OBLIGATIONS

4.1 VMAC's obligation is limited to repairing or, at VMAC's option, replacing, during normal business hours at an authorized service facility of VMAC, any component, which in VMAC's judgment is proven to be defective as warranted.

4.2 VMAC's obligation is limited to Product(s) proven to be warranted. No liability is accepted for any consequential damages, injuries or expenses directly or indirectly related to Product(s) failure.

5 BUYER OBLIGATIONS

5.1 Buyer shall notify VMAC of the alleged defect within 10 days of initial discovery and return the allegedly defective component(s) within 30 days of initial discovery.

5.2 The Buyer must prepay all costs associated with the warranty claim and submit receipts and/or invoices to VMAC for evaluation.

5.4 If required by VMAC, the Buyer must return components claimed under this warranty to a facility designated by VMAC for evaluation, to establish a claim under this warranty.

5.5 Buyer shall maintain and service VMAC Product(s) in accordance with the VMAC Product(s) Owner's Manual.

6 WARRANTY REGISTRATION VALIDATION

6.1 A warranty registration form is provided to the Buyer with the Product(s). The form must be fully completed by the Buyer and returned to VMAC upon completion of the installation of the Product(s) to validate the warranty. Warranty registration can also be completed online on the VMAC website at http://www.vmac.ca/index.php?warrantyregistration. Warranty claims will not be processed unless VMAC has received a fully completed warranty registration form.

7 DISCLAIMER AND WARRANTY SERVICE

7.1 Any labor costs claimed in excess of VMAC's set rate and/or times are not provided by this warranty. If applicable, any labor costs in excess of VMAC rate schedules caused by, but not limited to, location or inaccessibility of the equipment, travel time or labor provided by unauthorized service personnel are not provided by this warranty.

7.2 This warranty is in lieu of all other warranties or obligations express or implied. VMAC expressly disclaims all implied warranties of merchantability or fitness for a particular purpose.

7.3 Warranty claims must be pre-authorized by VMAC, and the components returned via prepaid freight using the designated "Returned Merchandise Authorization" number and form.

Safety Precautions

Observe the following general safety rules:

- pay attention to operations, do not leave the vehicle unattended
- follow safe work practices and wear the appropriate safety equipment when operating air-powered equipment, particularly eye and hearing protection
- avoid contact with drive belts
- avoid all contact with pressurized air, because if it penetrates your skin it can enter your bloodstream and kill you
- to prevent compressor explosion or fire, make sure that the air entering the compressor is free of flammable vapors
- vaporized oil propelled by high-pressure air is an explosive mixture
- do not breathe the compressor air, vaporized oil is a respiratory hazard
- stay clear of all moving parts when the system is operating
- follow all safety precautions for underhood mechanical work
- follow safety procedures for tire service

Observe these rules when operating the compressor:

- do not bypass or disable the oil temperature sensor
- do not expose the tank or compressor to extreme heat
- do not perform any service until the system has been completely blown-down and you have verified that all air has been discharged
- do not repair or service a pressurized system
- maintenance and repair on system components should only be performed by qualified personnel
- the vehicle must be in park (for automatic transmissions) or neutral (for manual transmissions) with the park brake or air spring brake fully applied before starting the compressor and at all times during compressor operation
- use a regulator in the output line to precisely control the final air delivery pressure
- run the system at idle speed under no-load conditions for 2 to 3 minutes before turning the system off to allow system cooling and lubrication
- do not bypass the park brake or DDC connections
- do not operate the compressor while driving
- do not tamper with the pressure relief valve
- do not attempt to repair or modify any component

Installation Instructions

Detailed information provided in a separate publication, *Installation Manual for the Underhood Air Compressor*, which provides specific information for each different application.

This information includes torque tables, recommendations and other important information for correct installation. The information in the installation manual is intended for use by trained, professional technicians with the knowledge, tools, and equipment to do the job properly and safely. Installation should not be performed by persons without the appropriate skills.

Do not attempt to install any of these systems without the appropriate installation manual.

As part of the installation process, ensure that the safety and operational instruction decal is affixed in an obvious location so that vehicle operators can easily see it.

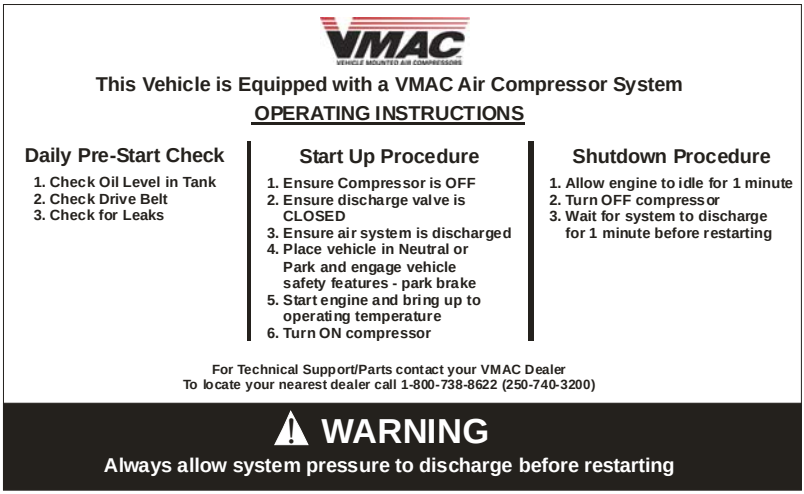

System Specifications

Model: VR70 and VR140 Underhood Air Compressor

Type: rotary screw

Drive System: separate serpentine belt from engine crankshaft

Control: electric on/off 12V clutch control

Maximum Air Delivery:
- VR70 70 CFM and 175 PSI
- VR140 150 CFM and 175 PSI

Pressure Regulation: mechanical inlet control valve modulates flow in response to demand

Engine Controls: throttle control to modulate between idle and upper limit RPM to maintain air supply

NOTE: Some trucks have onboard computers that must be programmed by the OEM dealer to permit operation of the electronic throttle control.

Safety Features:
- 200 PSI relief valve in oil/air tank
- temperature safety sensor in compressor
- rapid blow-down valve to discharge system pressure on shutdown (10-15 seconds)
- drive disable circuit (DDC)

Lubrication: VMAC certified and approved synthetic oil

Filters:
- paper-type replaceable air filter
- spin-on type oil filter
- coalescing separator element

Operating Principles

These systems use a flooded-lobe, rotary screw compressor. The oil-filled compressor housing contains two rotors, turning at a conservative speed.

Compression occurs when inlet air (at normal atmospheric pressure) enters a chamber where it is trapped between the rotating rotor lobes.

A lubricated pitch line provides sealing. As the lobes mesh, they reduce the volume of the air, compressing it to the desired pressure.

Oil Separation and Cooling

The system has a two-stage air/oil separator. The first separation stage consists of baffles, which perform mechanical separation. The second stage uses a special separation element, which delivers dry air to the outlet.

A liquid-to-liquid cooler connected to the engine cooling system cools the oil. This maintains the oil temperature in an optimal performance range which increases system durability and reduces the temperature of the compressed air.

Filtration

The rotary screw compressor is designed and machined to exacting tolerances. Foreign particles entering the system will drastically damage or shorten the life expectancy of the compressor and will result in damage to bearings, gears, rotors and the inside of the housing.

The system is equipped with a replaceable paper element air inlet filter and a spin-on cartridge oil filter. There is also a built-in coalescent filter for the second separation stage. A scavenge screen filter is fitted to the rear of the tank.

The system filters enhance performance and extend component life by reducing damage from dust and other debris. Proper filter maintenance is the key to long compressor life.

Belt Alignment and Tensioning

This system is equipped with automatic belt tensioning and does not require manual adjustment. Always check pulley alignment to ensure proper belt operation. All components are designed and machined to precision, but some play in mounting holes may still occur.

Pressure Regulation and Engine Speed Control

The system uses two control systems; an adjustable pressure regulator and an engine speed control which automatically adjusts engine RPM to respond to air consumption demand. These control devices provide the following benefits:

- instant response to air flow demands
- reduction of standby noise
- reduction of cooling system load

Adjustment of these control devices provides accurate control over air output pressures and flow, ranging from 145 PSI to 175 PSI.

Safety Devices

An external regulator is recommended for operation at pressures lower than 145 PSI.

A pressure relief valve in the tank and an inlet control valve ensure that the system always operates within the designed minimum and maximum pressure range. For additional safety, the system is equipped with an automatic rapid blowdown system to discharge system pressure upon shutdown.

There is a switch which only permits operation when the mechanical or air park brake is applied. Vehicles with automatic transmission are fitted with a “Drive Disable Circuit”, (DDC) which disables the throttle control and prevents engine speed increase when the vehicle is in gear.

The system also contains an oil temperature sensor in the compressor which stops system operation should the temperature become excessive or the oil level too low.

The system is protected by a fuse. If the fuse blows continuously, there is an electrical problem that will not be solved by a higher fuse rating. Exceeding the rating can cause component damage.

Do not disable or bypass the over-temperature shutdown circuit. Failure of the shutdown system could result in equipment damage, injury or death.

Line Protection

To prevent damage to the lines, observe the following:

- always secure the hoses, do not allow the hoses to dangle under the vehicle
- make sure that the hoses do not get pinched in steering or suspension components
- keep the hoses away from hot surfaces, such as turbocharger housings or exhaust system components
- do not bend the hoses tightly around sharp metal edges
- keep the hoses away from fan blades or belts
- if the hoses are secured in a bundle, protect them from abrasion by insulating them from each other using rubber padding or plastic loom

Special Installation Notes

If you intend to use an auxiliary air tank with this system you must observe the following installation procedure. Failure to observe this procedure will result in damage to the system.

The line from the VMAC tank to the auxiliary air tank must have a check valve installed to prevent VR tank blow-down from draining the auxiliary tank and to prevent moisture from entering the VMAC tank.

The line to the auxiliary tank must not be installed in the bottom of the tank, but must be installed as high as possible to prevent water from clogging the line.

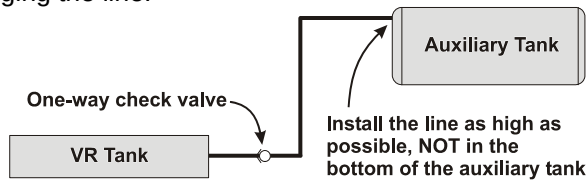

System Operation

The vehicle must not be parked on grades exceeding 15 º in slope, as this will affect lubrication and air/oil separation.

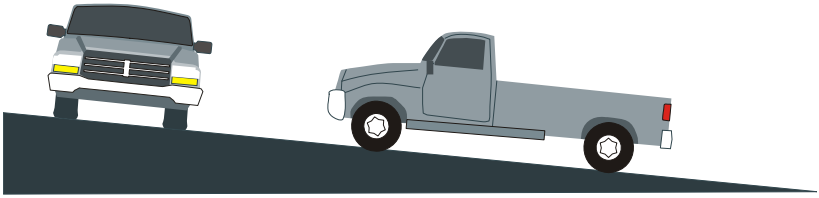

1. Place the manual transmission in neutral or the automatic transmission in park and fully apply the park brake.

2. Start and run the vehicle long enough for the engine to stabilize at base idle and reach normal operating temperature.

3. Close the hood (if open).

4. Close all compressor air system outlets.

5. Activate the compressor using the ON switch on the control box

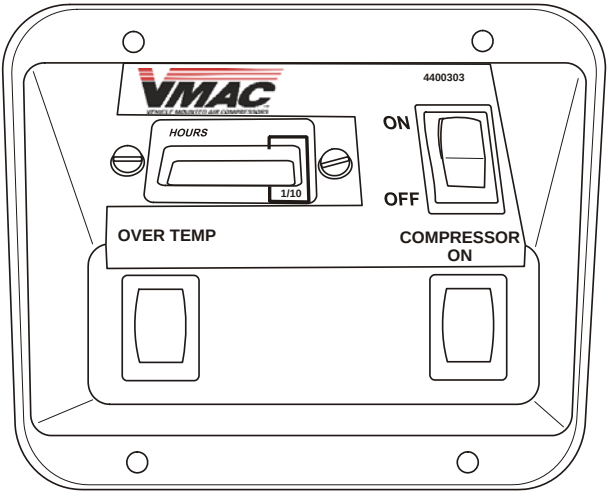

Pyramid style control box

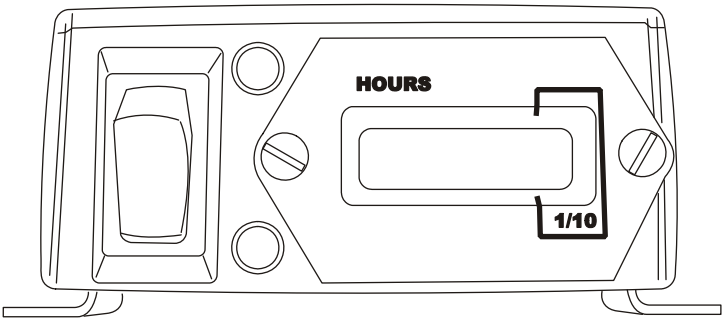

Low profile control box

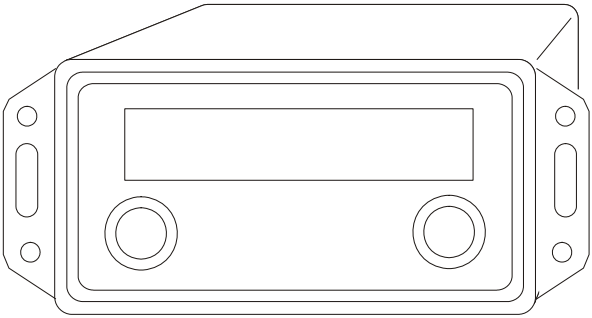

Digital control box

Engine RPM will rise for a few moments while the compressor system comes up to pressure, then RPM will settle to the standby speed which is at a preset base idle RPM. This is normal operation.

To prevent damage to the belt and compressor clutch, allow the system to vent pressure for at least 30 seconds after shutdown before attempting to restart the compressor.

Starting the compressor immediately after shutdown will cause the belt to slip and the clutch to burn out.

Cold Climate Operation

1. Place the manual transmission in neutral or the automatic transmission in park and fully apply the park brake.

2. Start the vehicle engine and allow it to reach normal operating temperature.

3. Allow the vehicle to run for an additional 15 minutes after reaching operating temperature to allow heat transfer from the engine coolant to the compressor oil through the heat exchanger.

4. Activate the compressor using the ON switch on the control box..

Automatic Shutdown

If the compressor oil gets too hot, the over-temperature circuit will disengage the compressor clutch, preventing operation of the system. The red indicator light on the control console will illuminate, indicating a problem.

If this problem persists, refer to the problem diagnosis section in this manual.

1. Turn the compressor switch on the control unit to the “OFF” position.

2. Allow a few minutes for the system to vent pressure and for the oil to drain back to the tank, then check the oil level through the sight-glass on the tank. Oil level must be checked with the vehicle in a level position, not on a slope.

3. If the oil level is low, check and repair any leaks, then add oil until the correct level is reached.

Adding Oil to the System

1. Remove the fill plug from the inlet control valve.

The oil is clear and the level may be difficult to see in the sight glass. Have someone watch the level as you add oil.

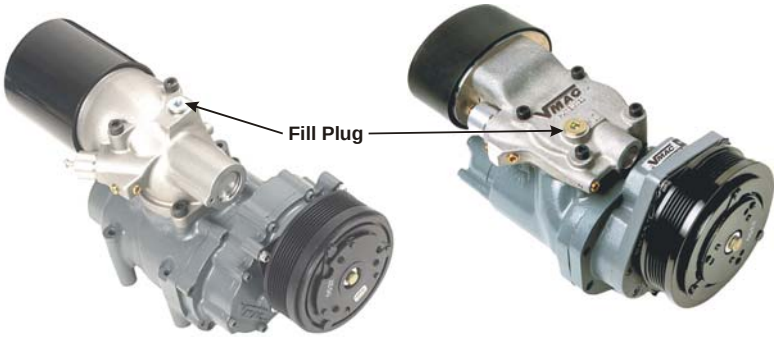

VR140 VR70

2. Pour oil into the oil fill hole on the inlet control valve using a funnel. It is important not to overfill the system. Overfilling the system with oil can flood the sight glass window and make the system appear empty.

3. As you add oil, turn the compressor clutch clockwise with a ratchet and socket using the hex head cap screw at the center of the compressor clutch.

4. Allow five minutes for the oil to drain into the tank, then check the sight-glass on the tank to ensure that the correct oil level is attained.

5. Install the fill plug and tighten it securely.

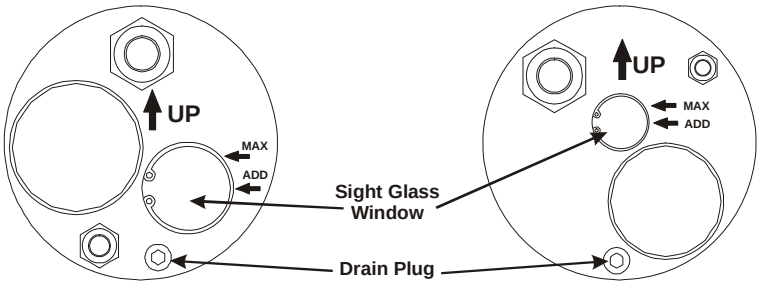

VR70 VR140

You must use VMAC certified and approved synthetic compressor oil. Failure to use this oil will result in damage to the compressor and will void your warranty.

Adjusting the System

If insufficient airflow is developed under high demand conditions, check engine RPM.

When the inlet control valve is wide open, approximately thirty engine revolutions are required to produce one cubic foot of air flow from the VR70 compressor and fifteen for the VR140 compressor.

The Throttle Control or Pneumatic Throttle Controller is adjusted at the factory to provide good results without adjustment in most typical, compressor applications. Some applications may require adjustments to provide the necessary airflow and pressure.

Engine RPM adjustments must be made so that the amount of air delivered by the system matches the requirements of the tools or equipment that you will be using.

Airflow and system pressure are related. If airflow demands on the system are low, operating pressure will remain high. If airflow demands are high, operating pressure will reduce. By making adjustments to the engine speed while operating a specific tool, you will achieve optimum performance.

If you must set up a system without knowing the demands on the system, you can make engine speed adjustments by using an orifice in the outlet to simulate tool use. The diagram below shows a system testing and adjustment tool, (VMAC part # A700052) that you can use to simulate different operating situations. Install this tester to the tank output fitting before making any changes.

Use the correct orifice for the VR70 or VR140 system. These orifices are different and must be used for the correct application.

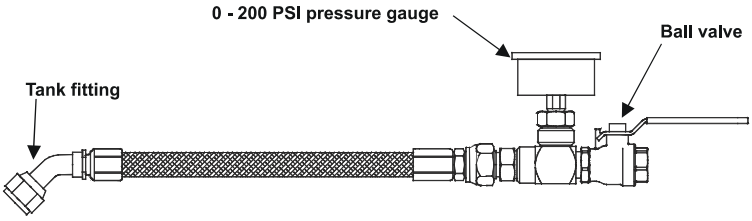

System Testing and Adjustment Tool - A700052

Adjusting the Pressure Regulator

The pressure regulator is adjusted to limit maximum pressure to a safe level. Because pressure and flow are related, this adjustment is also very important for optimum performance. You cannot accurately adjust system flow by using the pressure regulator.

Attempting to change flow by adjusting only the pressure regulator can raise system pressures high enough to activate the 200 PSI relief valve on the air/oil tank. This will result in rapid air loss.

1. Install the test tool in the tank outlet with the ball valve closed.

2. Make sure that the oil level is correct and the system is at operating temperature.

3. Operate the system until it reaches full pressure. Observe the pressure on the gauge.

4. Loosen the adjusting screw lock nut on the regulator.

5. Pressure can be adjusted within a range of 145-175 PSI, depending on your requirements.

Prolonged operation above 175 PSI may damage the pressure regulator.

Never adjust the pressure cutout to exceed 175 PSI. 200 PSI will result in activation of the pressure relief valve at the air/oil tank. Rapid air loss will occur which can cause component damage, injury, or death.

6. Rotate the adjustment bolt clockwise to increase pressure. Rotate counterclockwise to decrease pressure. Tighten the lock nut.

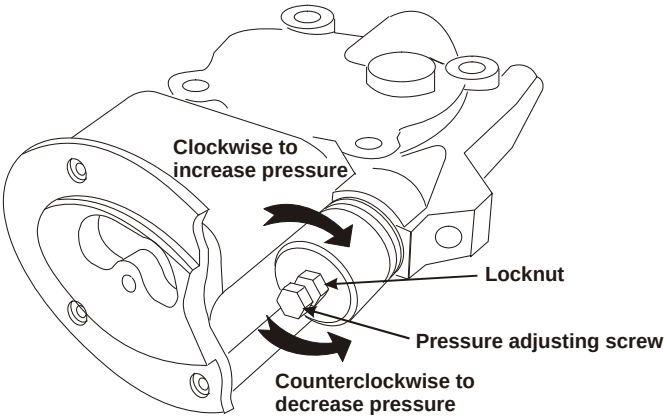

The inner filter plate is shown removed for illustration purposes only.
This is a factory installed part and must NOT be removed during system setup.

7. Open the ball valve to allow air to flow and pressure to drop. Engine speed should increase. Close the valve and observe the pressure to make sure that the adjustment is correct.

Electronic Throttle Control Adjustment

1. Place the manual transmission in neutral or the automatic transmission in park and fully apply the park brake.

2. Allow the vehicle to run until the engine is at operating temperature.

3. Operate the air compressor system until the oil is warm.

4. Open the ball valve on the test tool and observe the engine tachometer.

Make sure that there are no restrictions to air flow. If the system cannot produce maximum flow from the tank, there will be no change in RPM when you turn the adjusting screw.

5. Turn the maximum RPM adjustment screw clockwise to increase engine speed and counterclockwise to decrease maximum engine speed. Count the turns in case you have to start over.

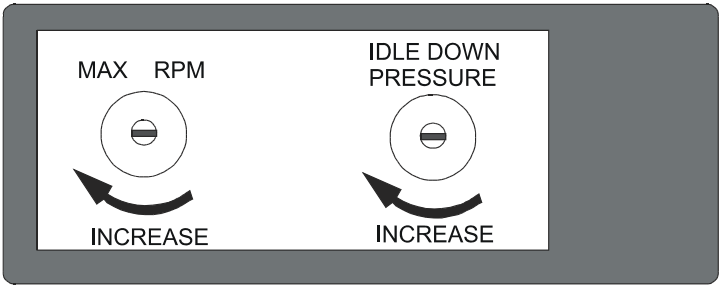

6. Close the air valve slowly to allow the system pressure to rise.

7. Once the system pressure is at maximum, slowly open the ball valve on the test tool until the pressure is approximately 10 PSI below maximum. Engine speed should start to ramp-up when air pressure drops to approximately 140 PSI.

8. Adjust the “Idle Down Pressure” up or down so that the engine speed just starts to climb at approximately 10 PSI below maximum system pressure, The adjustment for idle-down pressure must be turned clockwise to increase pressure or counterclockwise to reduce pressure.

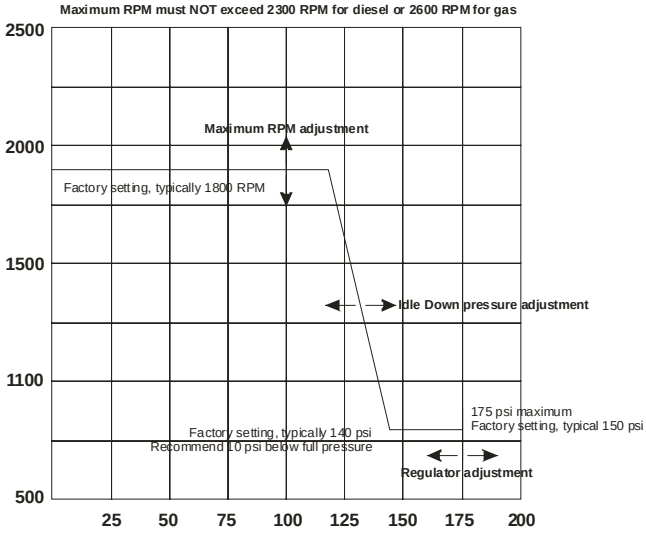

Adjusting the Pneumatic Throttle Controller

The throttle controller is preset at the factory for most applications but individual settings may be needed subject to air requirements.

Never adjust the pressure cutout to exceed 175 PSI. 200 PSI will result in activation of the pressure relief valve at the air/oil tank. Rapid air loss will occur which can cause component damage, injury, or death.

Before starting the engine, check the measurement between the throttle lever arm and the cable nipple. This should be adjusted according to the recommendations in the appropriate installation manual. Typical setting is approximately 1/4 inch.

The distance between the cable nipple and the throttle lever arm determines the amount that the throttle will open when the controller operates. Less than the recommended setting will result in higher maximum RPM, while more than the recommended setting will result in lower maximum RPM. This can be regarded as the coarse adjustment for the upper engine speed setting.

Idle down pressure is the system pressure above, which the throttle begins to progressively back off on engine speed. No adjustment of this parameter is required because the idle down function of the throttle is slaved off of the regulator output.

1. Place the manual transmission in neutral or the automatic transmission in park and fully apply the park brake.

2. Operate the system so that it is pressurized and at operating temperature.

3. Open the ball valve and observe the RPM.

4. To adjust the maximum RPM limit:
    - loosen the locknut (5) on the engine end of the throttle controller cable
    - increase the upper RPM limit by turning the adjusting nut (6) counter-clockwise
    - decrease the upper RPM limit by turning the adjusting nut clockwise

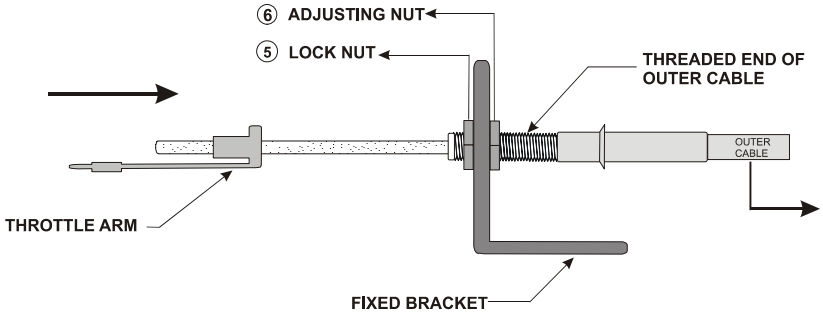

INCREASING UPPER RPM LIMIT SETTING
TURNING NUTS COUNTER CLOCKWISE

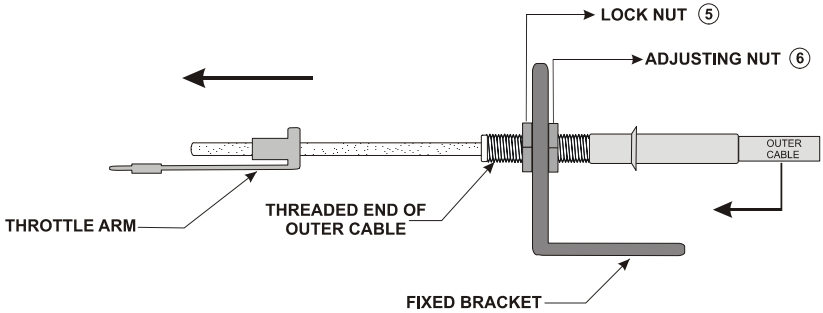

DECREASING UPPER RPM LIMIT SETTING
TURNING NUTS CLOCKWISE

5. Tighten the locknut.

6. Close the air valve slowly to allow the system pressure to rise.

7. When the pressure has increased to approximately 30 PSI below the maximum pressure set at the regulator, the engine speed should start to roll off and should reach the lower limit.

8. When the air valve is opened slowly the pressure should drop approximately 20 PSI below the maximum pressure set at the regulator. Engine speed should start to increase.

Routine Maintenance

The compressor system contains no reed-valves or other easily fouled, fatigue-prone components. With proper maintenance, the need for premature repair or component replacement can be drastically reduced.

Impact damage and premature bearing failure may occur in the compressor bearings if the system is not operated on a regular basis due to vibration caused by truck operation. Operate the system at least every 30 days for 15 minutes at no load to ensure bearing lubrication and rotation.

During the warranty period, you must follow the maintenance schedule and use only original genuine VMAC replacement parts to maintain your system and your warranty.

The most critical aspect of maintenance is proper air filtration and clean oil. If any particles enter the compressor through the air inlet, they can contaminate roller bearings, gears and the rotors in the compressor. Contamination will cause severe, rapid damage to components.

Never run the compressor, drive the vehicle or even allow the vehicle to sit parked without the recommended air filter and filter cover installed.

Maintenance Schedule

The following maintenance schedule should be observed to assure good performance and long service life. The hours indicated are those displayed on the Compressor Control Panel. Service should be performed at the lesser of the two intervals, whichever occurs first.

For replacement part numbers, please check the appropriate Illustrated Parts List for your application or call a dealer near you.

Always use a VMAC oil filter which is designed to withstand the high pressures, not an automotive filter.

50 hours:
Check the drive belt

200 hours or 6 months:
Replace the air filter, oil filter and change oil

Use service kit #A700019 (VR70)
#A700059 (VR140)

400 hours or 1 year:
Replace the air filter, oil filter, coalescing element and change oil

Use service kit #A700020 (VR70)
#A700060 (VR140)

Inspect the Drive Belt

Check the drive belt carefully for evidence of glazing, missing portions of the ribs or damage to the belt edges and surface. If the belt is damaged, install a new drive belt.

Inspect all pulleys and idlers for damage. If any component shows cracks, chipping, impact damage or any other indications of physical damage, replace the pulley or idler.

If the damage indicates possible misalignment, check pulley alignment. If the pulleys are not properly aligned, check all fasteners to ensure that they are properly torqued and that there are no loose components.

Replacing the Air Filter

If the system has been just operated, shut off the engine and wait at least 30 seconds for the air pressure to vent before working on the system.

1. Clean loose debris from the area around the compressor and the filter cover to prevent contamination entering the compressor.

2. Remove the filter cover retaining nut, the filter cover and the filter element.

3. Immediately cover the air inlet opening by masking with tape or with a clean cloth to prevent contamination. Do not use compressed air or perform any other tasks around the compressor until the filter and cover are replaced.

4. Clean the inside of the filter cover with a clean, dry cloth. Do not use flammable solvents to clean the inside of the cover. If you do use solvent, rinse the inside of the cover thoroughly with fresh water and dry it before installing the cover.

5. Remove the cloth or masking and install a new air filter. Make sure that the filter fits over the machined step on the housing.

6. Replace the cover and secure it with the cover bolt. Do not over-tighten the bolt.

Never attempt to clean the filter element with compressed air. Replace the filter element.

Replacing the Oil Filter

If the system has been just operated, shut off the engine and wait at least 30 seconds for the air pressure to vent before working on the system.

Do not attempt to change the oil filter until the oil has cooled. Hot oil can cause severe burns.

1. Clean the area around the tank and the filter to prevent contamination.

2. Remove the filter by turning it counterclockwise. Before discarding the filter, check to make sure that the threaded nipple did not unscrew with the filter. If the nipple is in the filter, remove it carefully to avoid thread damage and replace it in the tank housing.

3. Check the gasket-sealing surface on the front of the tank for contamination, old gasket material or damage.

4. Apply a thin coating of compressor oil to the filter-sealing gasket and fill the filter with VMAC compressor oil.

5. Spin the filter onto the threaded nipple until the gasket contacts the sealing surface on the tank, then tighten the filter an additional 3/4 to 1 turn to seat the sealing gasket.

6. Check the oil level in the sight glass on the air/oil tank.

7. Start the engine and bring it to operating temperature.

8. Place the manual transmission in neutral or the automatic transmission in park and fully apply the park brake.
9. Turn the compressor switch on the control unit to the “ON” position, allow the system to pressurize and return to preset base idle speed.

10. Check for oil leaks.

Never overtighten the filter, as this may damage the seal or the filter.

Changing Compressor Oil

If the system has been just operated, shut off the engine and wait at least 30 seconds for the air pressure to vent before working on the system. Also allow sufficient time for the oil to cool.

1. Clean the area around the oil drain plug on the front of the air/oil tank to prevent contamination.

2. Remove the drain plug and drain the oil into a container large enough to hold at least 5 litres (1.32 U.S. gal.) for the VR70 and 9 litres (2.38 U.S. gal.) for the VR140.

3. Install and tighten the plug.

4. If you are replacing the oil filter, follow filter replacement procedures.

5. Remove the filler plug from the air inlet control valve and pour VMAC compressor oil into the oil filler hole on the inlet control valve using a funnel.

You must use the supplied compressor oil in this system. Failure to use this special oil will result in damage to the compressor and will void your warranty.

6. Turn the compressor clutch clockwise to speed the fill process.

7. Allow 5 minutes for the oil to drain into the tank, then check the level at the sight glass at the front of the tank. Continue adding oil until the level is correct.

Do not overfill the system. Overfilling the system with oil can flood the sight glass window and make the system appear empty.

8. Install the fill plug in the inlet control valve and tighten it securely.

9. Place the manual transmission in neutral or the automatic transmission in park and fully apply the park brake.

10. Start the engine and allow it to reach operating temperature.

11. Turn the compressor switch on the control unit to the “ON” position, allow the system to pressurize and return to preset base idle speed.

12. Turn the compressor switch on the control unit to the “OFF” position.

13. Allow the system to settle for 5 minutes, and then check the oil level through the sight glass. The level must be between the minimum and maximum level indicators.

14. Check for oil leaks.

Changing the Coalescing Filter

If the system has been just operated, shut off the engine and wait at least thirty seconds for the air pressure to vent before working on the system. Also allow sufficient time for the oil to cool.

In some applications, you may have to remove the tank from the frame and lower the back end to access the back of the tank.

1. Clean the front and back of the tank to prevent contamination.
2. Remove the drain plug and drain the oil into a container large enough to hold at least 5 litres (1.32 U.S. gal.) for the VR70 and 9 litres (2.38 U.S. gal.) for the VR140.
3. Install and tighten the plug.

4. If you are replacing the oil filter, follow filter replacement procedures.
5. Disconnect the air outlet line, 1/4 inch and 5/16 inch lines from the back of the tank.
6. Remove the bolts holding the discharge cap from the back of the tank and remove the cap and small spring.
7. Remove the coalescing filter with wave spring attached (or on the VR140, the large coil spring and spring plate) from inside the tank.

On older VR70 systems, remove and discard the large coil spring.

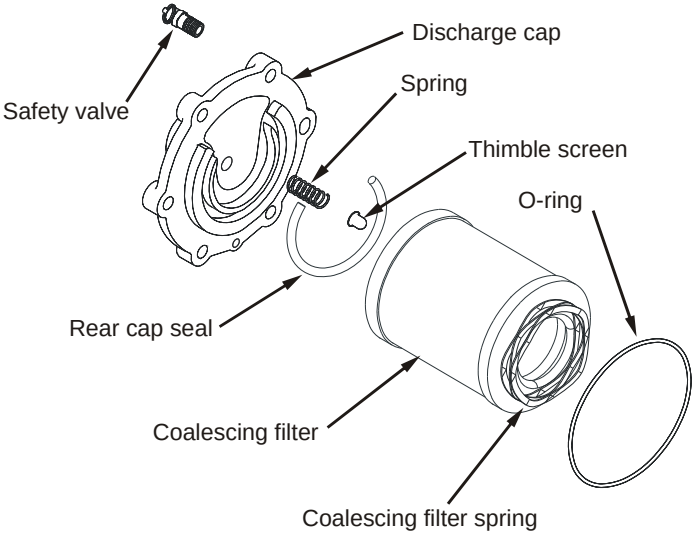

VR70 System

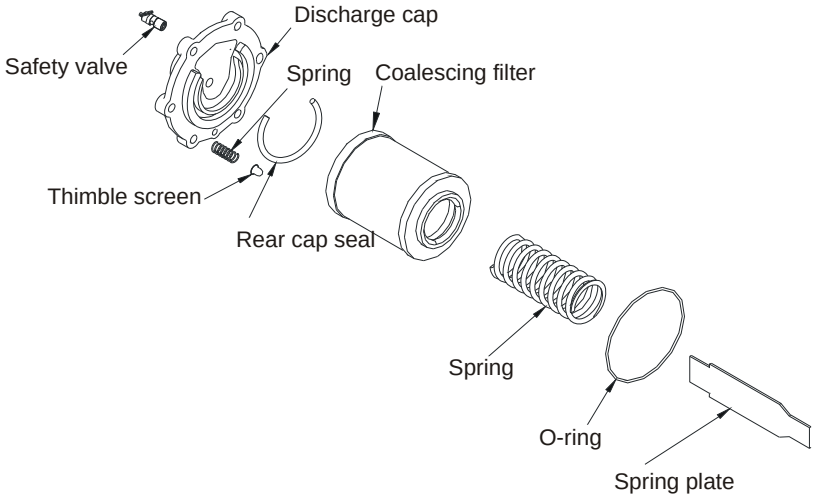

VR140 System

Check the inside of the tank for any evidence of metal filings or contamination; if found, flush the tank, hoses and cooler. Metal filings will damage the compressor.

8. Remove and discard the O-ring seal and the rear cap seal.
9. Wipe out the inside of the tank
10. Remove the thimble screen and spring and clean the discharge cap.

If you use solvents for cleaning, thoroughly rinse the parts with hot water to remove all solvent residues.

11. Clean the thimble screen spring and clean or replace the thimble screen.
12. Install a new O-ring and rear cap seal.
13. Thoroughly clean the large spring and spring plate. Remove any rust or contaminants.
14. Install the large spring (with spring plate on 140 systems – tapered end away from the filter) and a new coalescing filter. Make sure that the spring is in place, as it holds the coalescing filter tight against the rear cap seal.

The large spring also prevents electrostatic buildup by grounding the coalescing filter. If the spring is not installed, an electric arc may occur, which could result in an explosion, potential tank rupture or fire.

15. Install the discharge cap and torque the bolts to specifications.
16. Install the lines on the back of the tank.
17. Remove the filler plug from the air inlet control valve.
18. Pour compressor oil into the oil filler hole on the inlet control valve using a funnel.

You must use the supplied compressor oil in this system. Failure to use this special oil will result in damage to the compressor and will void your warranty.

19. Turn the compressor clutch clockwise to speed the fill process.
20. Allow five minutes for the oil to drain into the tank, then check the level at the sight glass at the front of the tank. Continue adding oil until the level is correct.

Do not overfill the system. Overfilling the system with oil can flood the sight glass window and make the system appear empty.

21. Install the fill plug in the inlet control valve and tighten it securely.
22. Place the manual transmission in neutral or the automatic transmission in park and fully apply the park brake.
23. Start the engine and allow it to reach operating temperature.
24. Turn the compressor switch on the control unit to the “ON” position, allow the system to pressurize and return to preset base idle speed.
25. Turn the compressor switch on the control unit to the “OFF” position.
26. Allow the system to settle for five minutes, and then check the oil level through the sight glass. The level must be between the minimum and maximum level indicators.
27. Check for oil leaks.

Problem Diagnosis

Problem diagnosis should follow sound, recognized practice. Quick, accurate diagnosis of problems should involve the following:

- accurately identify the problem by operating the system yourself
- determine possible causes for the problem by understanding how the system operates
- isolate the potential causes by accurate testing using the correct, recognized procedures
- perform proper repairs using the correct procedures and the recommended replacement parts
- perform proper post-repair testing to ensure that the repairs were effective
- do not use test practices that are potentially harmful to people or the equipment
- electrical testing should be performed according to the processes described in the troubleshooting chart. For accurate diagnosis, refer to the electrical circuit diagram in the installation manual.

Always ensure that manual transmissions are in neutral or automatic transmissions are in park with the park brake applied before starting the engine or operating the system.

SYMPTOM	POSSIBLE CAUSE	CORRECTIVE ACTION
Compressor does not run	Oil temperature too high.	Turn compressor off, allow to cool for 30 minutes, retry.
	Oil level is too low.	Park on level ground, check level at sight glass, add as necessary.
	Drive belt is broken or missing.	Install new compressor belt. Check alignment of pulleys.
	No power to the clutch.	Check for 12 V at the clutch, check fuse, check for broken wires or failed switch.
	Bad clutch ground.	With 12 V applied to the clutch check for voltage between the clutch stator housing and the engine. If voltage is present, ground the stator.
	Open clutch stator windings.	With compressor switch off and clutch wire disconnected, check resistance between the input wire and ground. Resistance (less lead resistance) should be 2.5 ohms to 3.0 ohms. If outside this range replace the stator.
Frequent over-temperature shutdowns.	Low oil level.	Check oil on level ground, add as required.
	Restriction in the compressor oil hoses.	Check for kinked or pinched oil hoses.
	Compressor oil filter plugged.	Replace oil filter.
	Heat exchanger not functioning or is fouled with deposits.	Remove and clean or replace heat exchanger.
	Engine cooling system failure (high engine temperature).	Correct engine cooling problems.
	Engine fan clutch slipping.	Replace fan clutch.
	High ambient temperatures.	Reduce duty cycle.
	Oil temperature probe failure.	Replace if defective.
	System needs service	Perform recommended service

SYMPTOM	POSSIBLE CAUSE	CORRECTIVE ACTION
Excessive air pressure	Pressure regulator valve too high.	Reduce system pressure by adjusting pressure regulator valve.
	System return line blocked or frozen	Clear or replace the line.
Engine stalls when compressor is activated.	System is under pressure.	Allow sufficient time for blow-down.
	Blow-down valve not working.	Replace blow-down valve.
	RPM setting too low or throttle not set correctly.	Readjust RPM and throttle settings for optimum operation.
	Throttle control not connected properly at foot pedal	Check for proper connections.
Belt squeals when compressor switch is activated.	System is under pressure.	Allow 10 seconds for blow-down.
	Blow-down valve not working or muffler is plugged.	Replace blow-down valve or clean muffler.
	Improper belt tension.	Check belt tensioner.
	Belt is glazed.	Replace belt.
Frequent relief valve operation.	Pressure regulator setting too high.	Adjust pressure regulator setting below 160 PSI.
	Pressure control line plugged or frozen.	Remove the pressure control line and clear any obstructions. (Blow out.)
	Relief valve defective.	Replace relief valve.
Power fuse blows.	Short to ground in the control circuit.	Locate and correct short or replace control panel.
	Incorrect fuse.	Install correct OEM fuse.
	Incorrect wiring.	Repair wiring according to wiring diagram.
Low air pressure.	Air flow is too high.	Reduce consumption.
	Throttle control set too low.	Increase maximum RPM settings.
	Pressure regulator valve set too low.	Increase pressure by adjusting pressure regulator valve.
Engine RPM excessive on initial startup and during operation.	Maximum RPM setting is too high.	Reduce maximum RPM setting throttle control or reset cable nipple.
	Idle-down pressure is too high.	Reduce idle-down setting of the throttle control.

SYMPTON	POSSIBLE CAUSE	CORRECTIVE ACTION
Objectionable noise level.	Excessive gear wear.	Contact the nearest dealer to replace compressor/gearbox assembly. Refer to the dealer.
	Maximum RPM setting higher than necessary to meet air demand requirements.	Reduce maximum RPM settings.
	Operating with the hood open	Close the hood.
Engine RPM stays at base idle when compressor runs.	Mechanical throttle control receiving power, housing is acting as a chassis ground.	Test and correct connections.
	Throttle control not adjusted properly.	Adjust throttle controls.
	Poor electrical connections.	Test and correct connections.
	Throttle control not functioning.	Replace throttle control.
	Pressure sensor defective or disconnected.	Check connections or replace pressure sensor.
Engine RPM over-revs when compressor is activated.	Throttle controls not connected properly.	Check and correct connections.
	Throttle control not setup properly.	Adjust high idle screw.
	Pressure sensor defective or disconnected.	Check connections or replace pressure sensor.
Engine RPM does not return to base idle.	Wiring fault.	Check and correct wiring according to wiring diagram.
	Throttle not properly adjusted.	Adjust idle down screw.
Engine RPM stays at maximum whenever the compressor is running.	Idle-down setting is too high.	Reset idle-down pressure.

SYMPTON	POSSIBLE CAUSE	CORRECTIVE ACTION
Excessive oil in the air.	Failed coalescing separator element.	Replace element.
	Clogged scavenge line screen.	Clean or replace parts as required.
	High oil level.	Correct oil level.
	Poor fit between coalescing filter and tank – lack of seal at O-rings.	Replace parts as required.
	Vehicle is not within requirements of 15 degrees of level.	Level vehicle and check for oil in the air.
	Compressor was turned off while running at high speed.	Allow engine RPM to drop before turning the compressor off.
	Wing tank – volume shutting down under load.	Clean or replace parts as required.
Oil blows out of compressor air filter on compressor shutdown.	Shutting the engine off while running at high speed.	Allow engine to idle-down before shutting down the compressor. Turn off any air tools before shutting down compressor.
Oil drips from clutch after shutdown.	Seal leaking.	Contact the nearest dealer to replace gearbox input shaft seal.

Accessory Products from VMAC

The following accessory products for your VR compressor system are available from VMAC. For more information or to order these products, call toll free 1-888-241-2289 or local 250-740-3200.

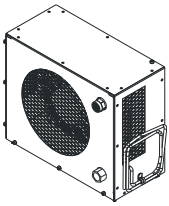

Eliminator Aftercooler
Part Number A800070

Removes up to 80% of moisture from compressed air. Quick installation, automatic drain and compact design

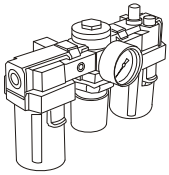

Filter Regulator Lubricator
Part Number A700151

Removes lubricants, water and dirt from the air stream. Adds atomized tool oil to lubricate tools. Reduces pressure for longer tool life.

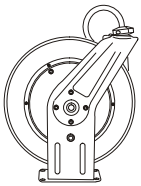

Hose Reel
Part Number A700007

Secure, compact, retractable hose storage in a sturdy reel.

Air Receiver Tank
Part Number A300010

Thirty-five gallon capacity in a compact tank, complete with fittings and a gauge.

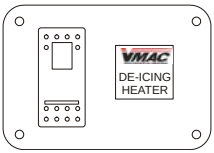

De-icer Kit
Part Number A700031

Insulated rope heater prevents freezing of lines and regulator.

Service Kits
VR140 200 hour Part Number A700059
VR140 400 hour Part Number A700060
VR70 200 hour Part Number A700019
VR70 400 hour Part Number A700020

Using OEM service products will extend the life of your system. Includes oil, filters, seals and O-rings. 200 hour and 400 hour service interval kits are available

VMAC – *Vehicle Mounted Air Compressors*
Toll Free: 1-888-241-2289 Local: 1-250-740-3200
Fax: 1-250-740-3201